ECO NO.	DATE	REV.	REVISION RECORD	AUTH.	DR.BY
6595	1-26 2009	D	UPDATE TITLE BOX WITH 45-95 BEDA MODEL.		GA
5683	2-25 04	A	ADD OVERSPEED BOARD		GA
5861	11-2 04	B	ADD JUMPER BETWEEN TB2-6&7; K2-86 WAS CONNECTED TO TB2-6.		GA
6179	3/20 2006	C	RELOCATED #14 YEL TB2-7 TO TB2-9		RPS

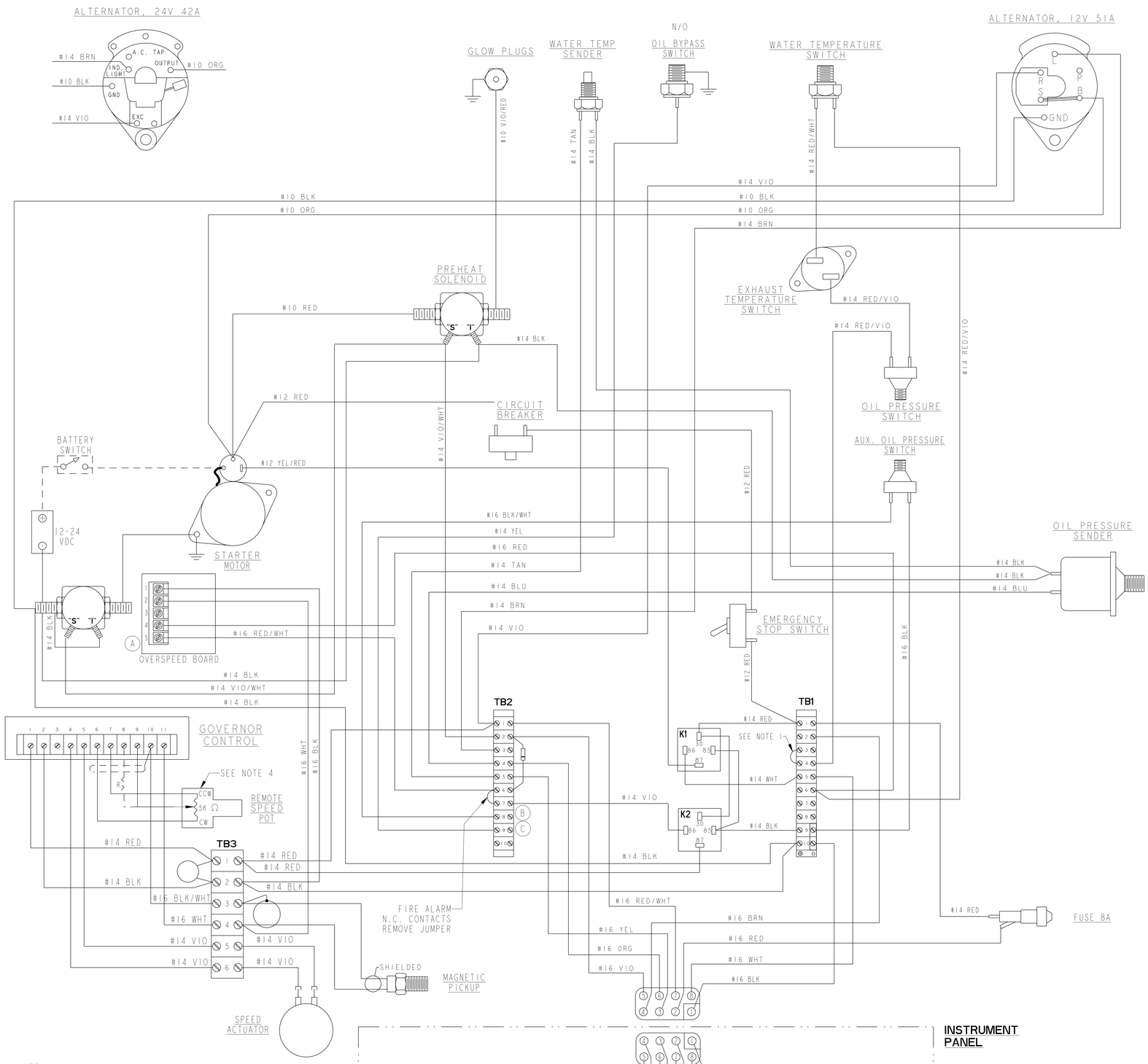

NOTE:

1. REMOVE JUMPER WHEN CONNECTING A SECOND REMOTE PANEL.

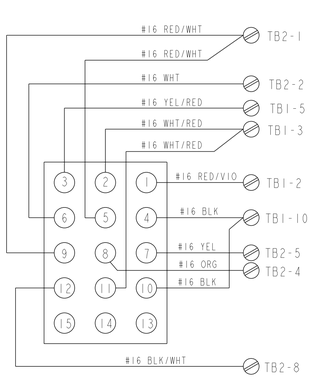

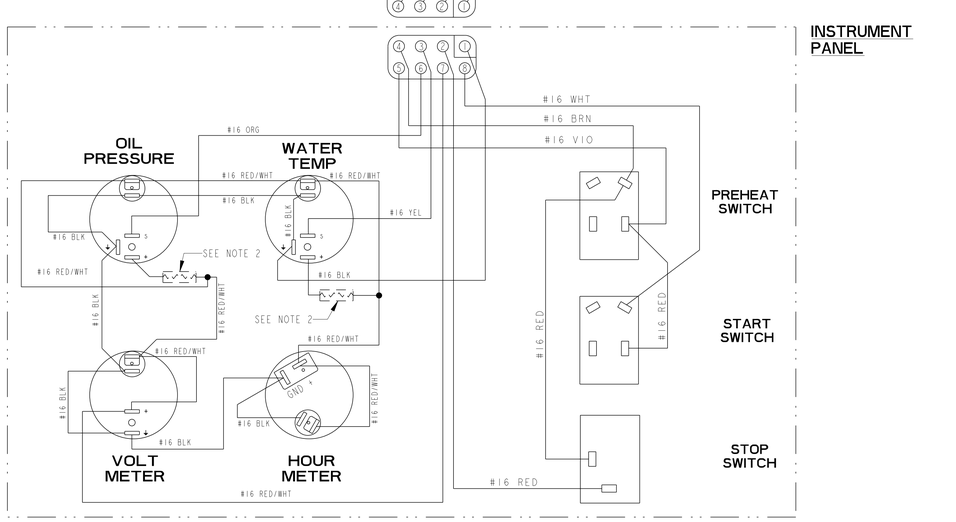

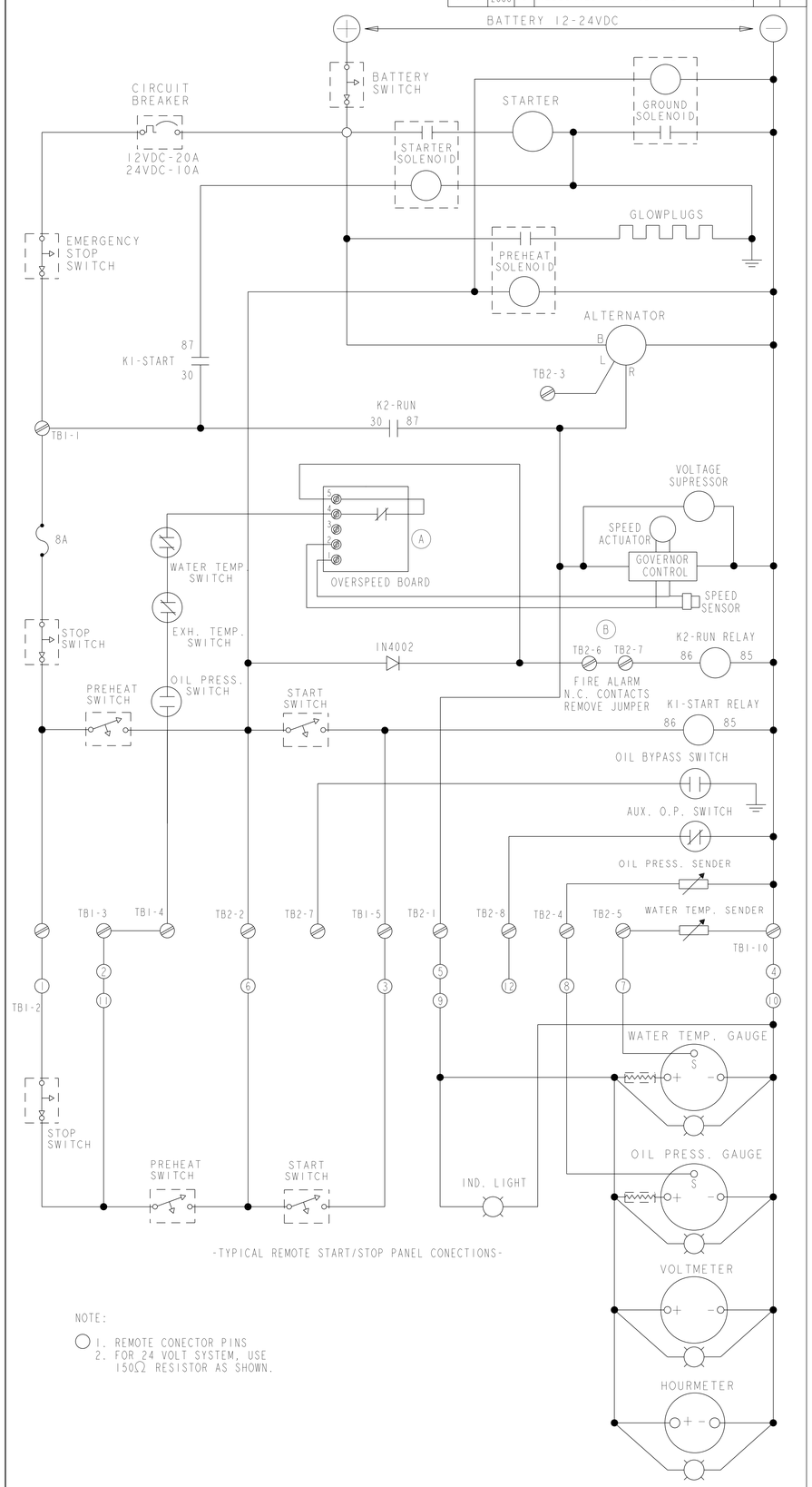

-TYPICAL REMOTE START/STOP PANEL CONECTIONS-

NOTE:

1. REMOTE CONECTOR PINS
2. FOR 24 VOLT SYSTEM, USE 150Ω RESISTOR AS SHOWN.

TOLERANCES (UNLESS OTHERWISE NOTED)	WESTERBEKE CORPORATION AVON MA. 02322		
INCHES .XX ±.02 .XXX ±.005 CAST ±.03 ANGLES ±.5° FINISH	MILLIMETERS .X ±.X .XX ±.XX	TITLE WIRING DIAGRAM/SCHEMATIC 45.0-95.0 BED/A - UNGND / PARALLEL	
		DRAWN BY Jeremy Anderson — DATE 06/Oct/03	MATERIAL: --- --- ---
DIMENSIONS INCHES / MILLIMETERS (WHEN APPLICABLE)		APPROVED BY — DATE	
		SCALE — SHT. 1 of 1	SIZE E — DRAWING NUMBER 48910 — REV. D