ECO NO.	DATE	REV.	REVISION RECORD	AUTH.	DR.BY

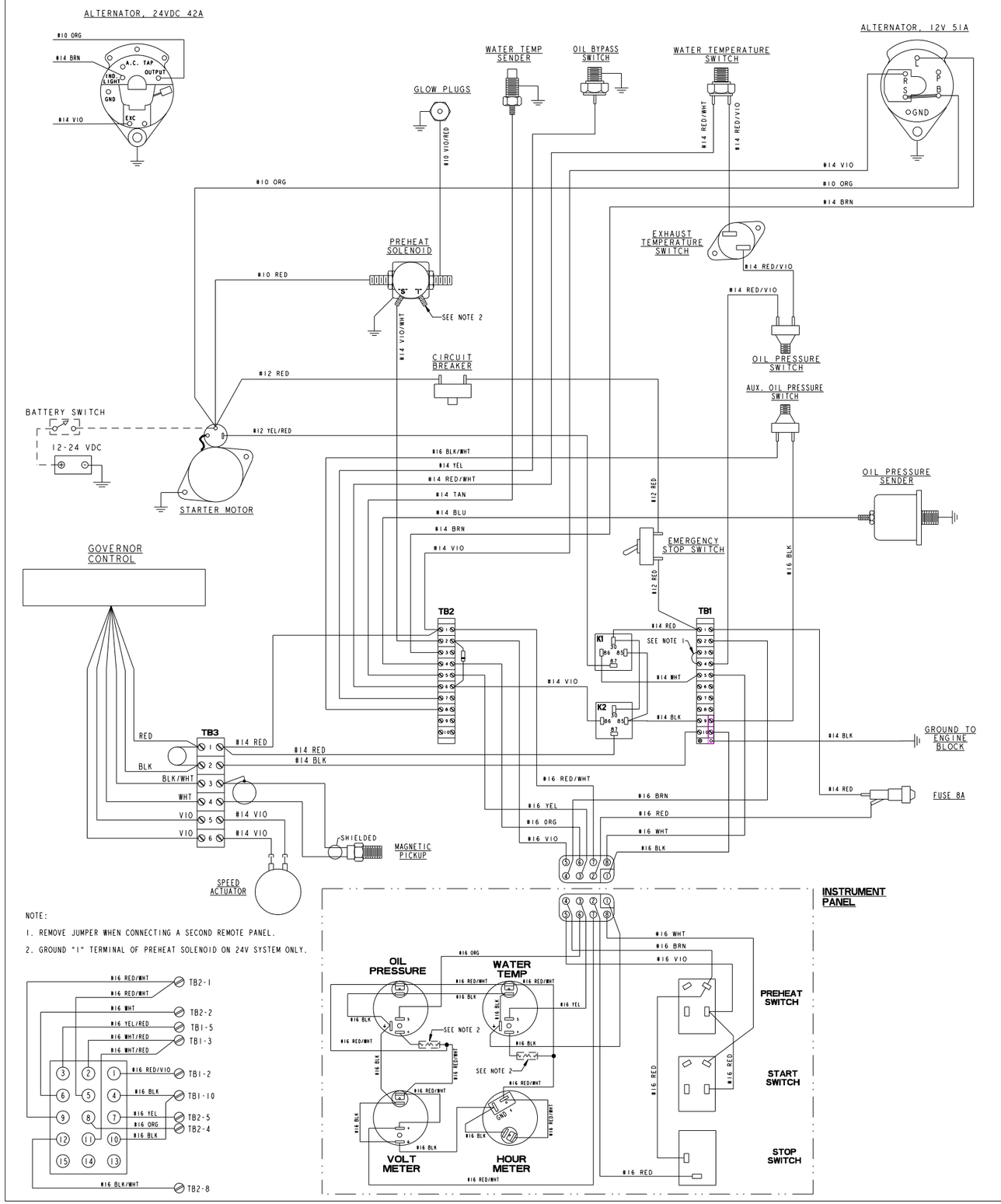

NOTE:

1. REMOVE JUMPER WHEN CONNECTING A SECOND REMOTE PANEL.
2. GROUND "I" TERMINAL OF PREHEAT SOLENOID ON 24V SYSTEM ONLY.

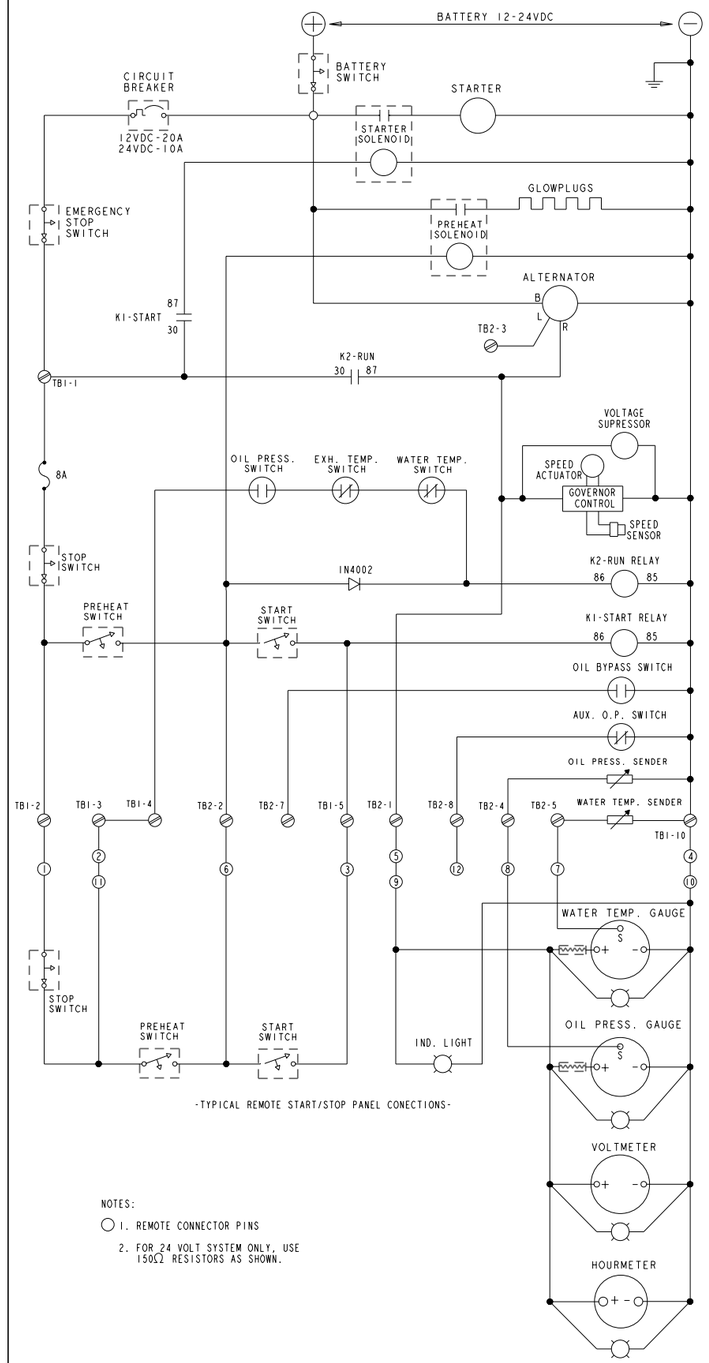

-TYPICAL REMOTE START/STOP PANEL CONECTIONS-

NOTES:

1. REMOTE CONNECTOR PINS
2. FOR 24 VOLT SYSTEM ONLY, USE 150Ω RESISTORS AS SHOWN.

TOLERANCES (UNLESS OTHERWISE NOTED)	WESTERBEKE CORPORATION AVON MA. 02322		
INCHES .XX ±.02 .XXX ±.005 CAST ±.03 ANGLES ±5° FINISH 63	TITLE WIRING DIAGRAM/SCHEMATIC MARINE GENERATOR		
DIMENSIONS INCHES MILLIMETERS (WHEN APPLICABLE)	DRAWN BY ANDREW ROSS	DATE 19/Apr/00	MATERIAL:
	APPROVED BY	DATE	
	SCALE	SIZE E	DRAWING NUMBER 46922
	SHT. 1 OF 1		REV. -