ECO NO.	DATE	REV.	REVISION RECORD	AUTH.	DR.BY
2444	7-26 94	A	CHANGED #10 BLACK WIRE TO #10 RED/WHT; OIL PRESSURE SWITCH WAS "CLOSED", NOW "OPEN"		JLN
2466	8-12 94	B	ADDED 3 SWITCHES,(PREHEAT, START, STOP) TO CONTROL BOX; ADDED 51A ALT.; ADDED START RELAY TO CONTROL BOX; BLK. WIRES WERE GRN.; RED/WHT WIRES WERE BLK.		WRM
2544	10-7 94	C	ADDED OPTIONAL HOURMETER DIAGRAM		WRM
2596	11-3 94	D	#14 PUR BETWEEN TB2 AND PANEL PLUG WAS #14 YEL; #14 YEL BETWEEN TB2 AND PANEL PLUG WAS #14 PUR.		MKM
2863	11-27 95	E	ADDED TERMINAL REFS.; EXCHANGED POSITIONS OF JUMPER AND STOP SWITCH; PLUG 3 TO TB1-1 WAS TO TB1-2, PLUG 4 TO TB1-2 WAS TO TB1-3; JUMPER FROM TB1-1 TO TB1-2 WAS FROM TB1-2 TO TB1-3.		MRK
3193	2-10 97	F	ADDED JUMPER BETWEEN TB1-2 AND TB1-3; #14 RED TO TB1-4 WAS TB1-3;#14 BRN TO TB1-3 WAS TB1-4;#18 RED TO TB1-5 WAS TB1-4; #14 BRN TO TB1-4 WAS TB1-5; #14 RED TO TB1-5 WAS TB1-4; PLUG 2 TO TB1-2, PLUG 4 TO TB1-3;ADDED THIRD REMOTE PANEL NOTE		MRK
4371	1-13 2000	G	ADDED OPTIONAL ALTERNATOR		JCA

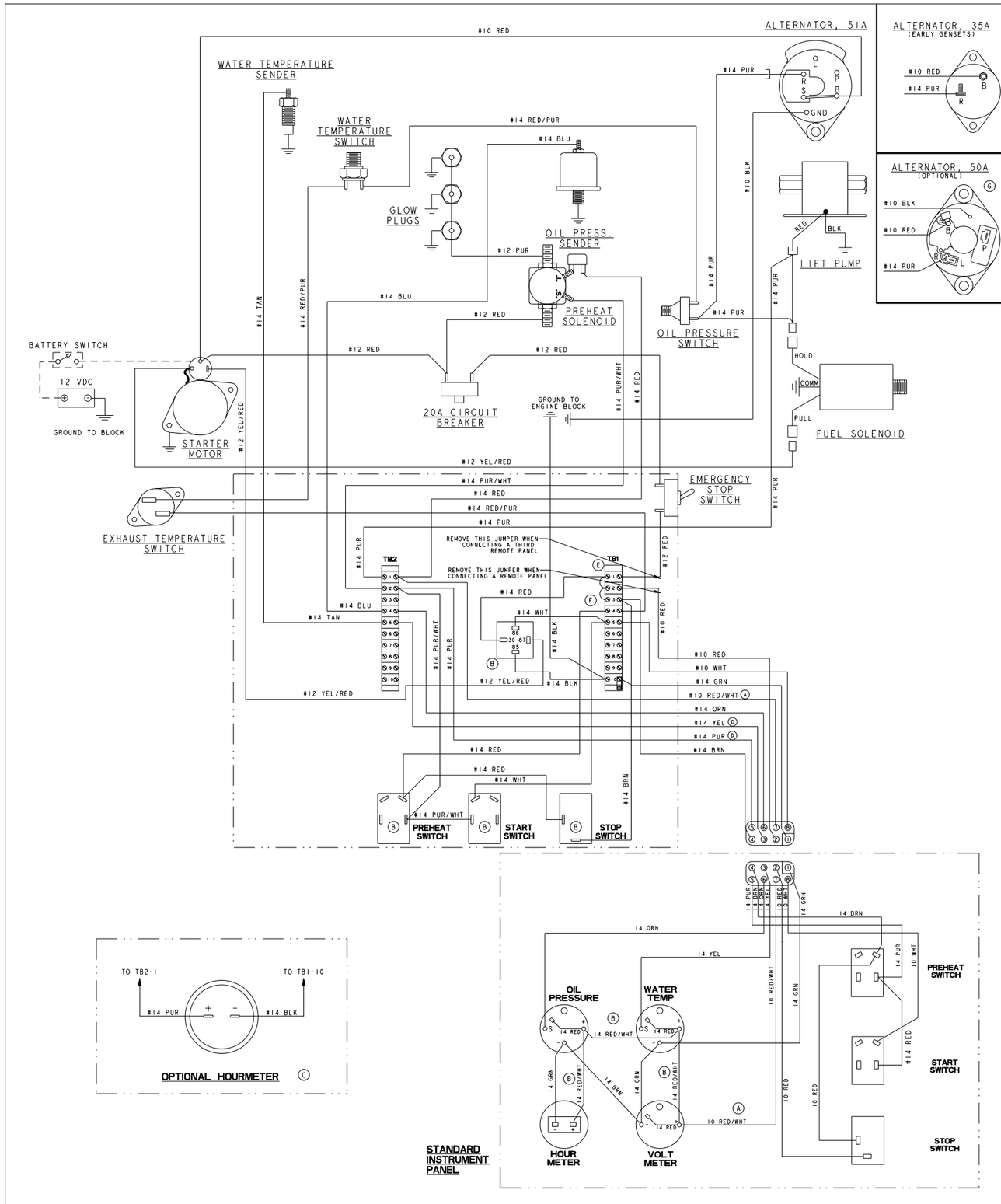

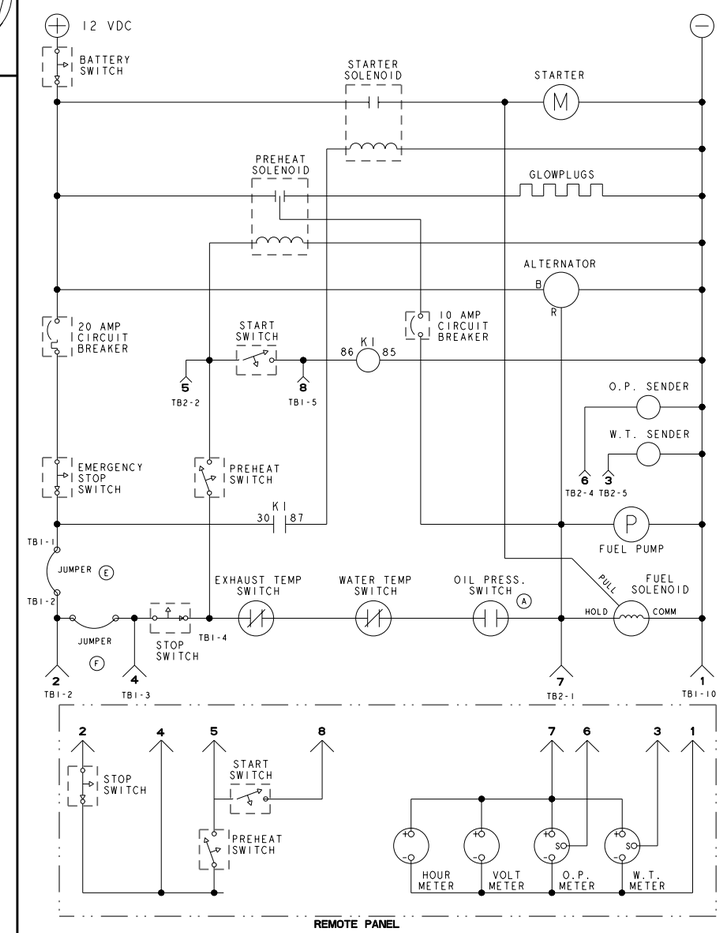

TOLERANCES (UNLESS OTHERWISE NOTED)	WESTERBEKE CORPORATION AVON MA. 02322			
INCHES .XX ±.02 .XXX ±.005 FRACT. ±.5° ANGLES ±.5° FINISH 63 / MILLIMETERS X. ± .X ± .XX ±	TITLE WIRING DIAGRAM / SCHEMATIC 7.6 BTD			
DIMENSIONS INCHES / MILLIMETERS (WHICH APPLICABLE)	DRAWN BY WRM	DATE 18/June/91	MATERIAL:	
	APPROVED BY	DATE		
	SCALE NONE	SIZE E	DRAWING NUMBER 39284	REV. G
	SHT. 1 OF 1			