ECO NO.	DATE	REV.	REVISION RECORD	AUTH.	DR.BY
4437	2/22/00	A	LABELED WIRES. ADDED 3RD RELAY TO WIRING AND SCHEMATIC DIAGRAMS. ADDED SEPERATE WIRE FROM W.T. SENDER AND FUEL SOL. TO PRE-HEAT SOL.ADD WIRE FROM K3 TO FUEL SOL.		ABK

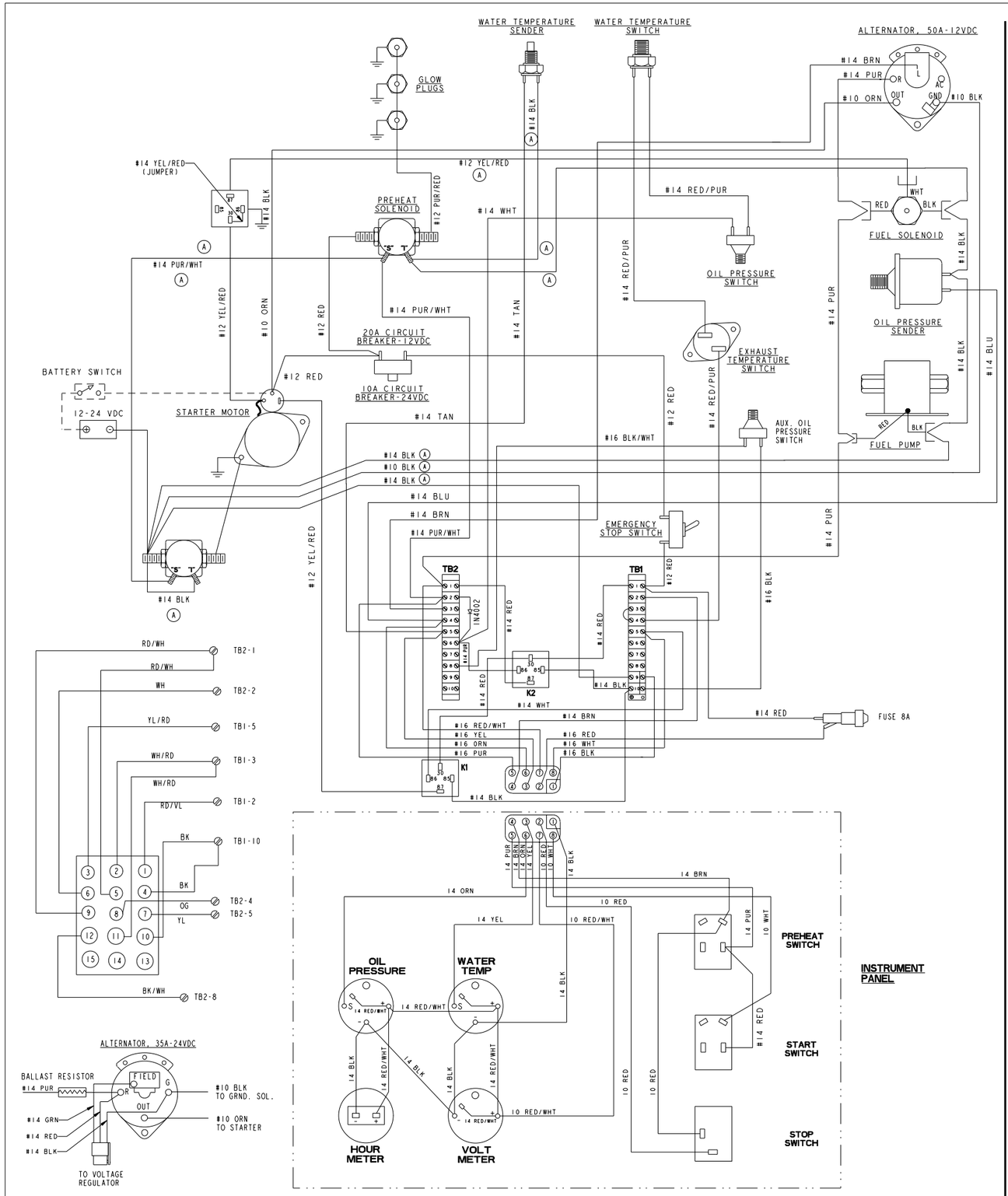

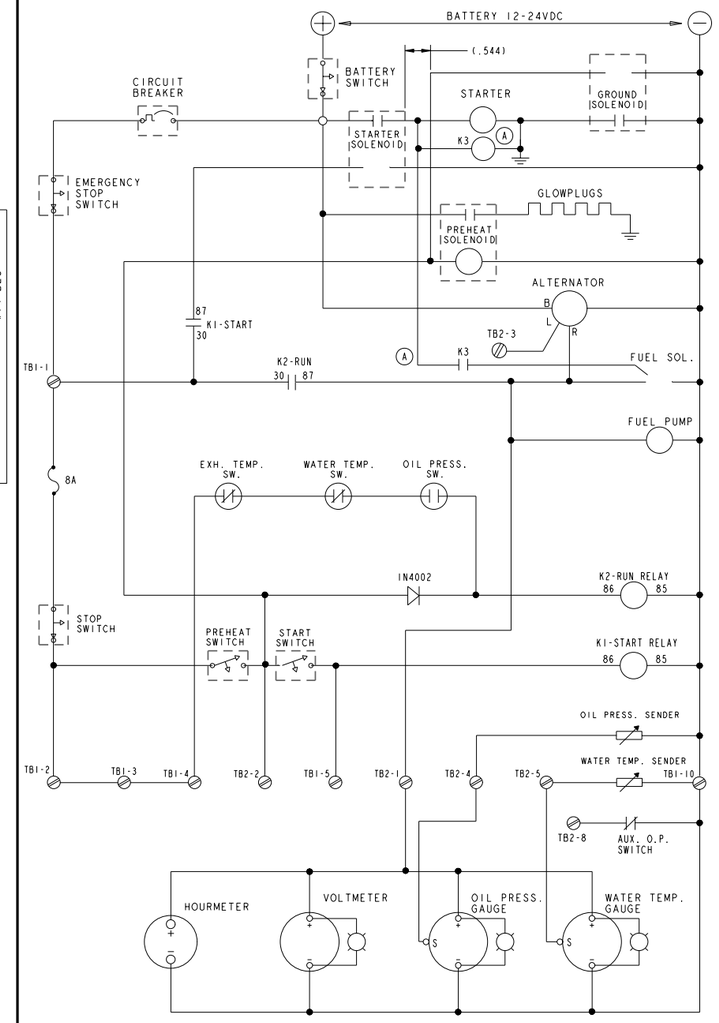

TOLERANCES (UNLESS OTHERWISE NOTED)	WESTERBEKE CORPORATION AVON MA. 02322		
INCHES / MILLIMETERS: .XX ±.02 / X. ±; .XXX ±.005 / .X ±; CAST ±.03 / .XX ±; ANGLES ±0°	TITLE: WIRING DIAGRAM/ SCHEMATIC 8.0 BTDA, 10.0 BTDA,12.5 BTDB,15.0 BTDC UNGND		
	DRAWN BY: JRS	DATE: 26/OCT/99	MATERIAL:
DIMENSIONS INCHES / MILLIMETERS (WHEN APPLICABLE)	APPROVED BY:	DATE	
	SIZE: E	DRAWING NUMBER: 43388	REV.: A
	SHT. 1 OF 1		