ECO NO.	DATE	REV.	REVISION RECORD	AUTH.	DR.BY
2129	2-26 93	A	ADDED 51A AND 72A ALT. DIAGRAMS		WRM
2461	8-5 94	B	DELETED JUMPER FROM PRESTOLITE 72 AMP. ALTERNATOR		MKM
2476	8-19 94	C	CHANGED #14 BLK TO #14 RED IN THE ADMIRAL PANEL. CHANGED #10 BLK TO #10 RED IN THE ADMIRAL PANEL		MKM
2525	9-29 94	D	ALL BLACK WIRES IN THE ADMIRAL PANEL WERE GREEN; REVISED DIAGRAM OF OPTIONAL LESTEK ALTERNATORS TO CORRECT CONFIGURATION.		WRM
2922	2-26 96	F	ADDED RESISTOR WIRE BETWEEN "I" TERMINAL OF PREHEAT SOLENOID AND GND		HFV
2922	2-26 96	F	IN OPT. ALTERNATORS, BROWN WIRE WAS NOT USED, ORANGE WIRE WAS CONNECTED TO WIRES 18 AND 9.		HFV
4131	6/24 99	G	ADDED LEECE - NEVILLE 90 AMP ALTERNATOR AND A 50 AMP MITSUBISHI ALTERNATOR WIRE #14 BLACK WAS #14 GREEN		JRS
4707	9/13 00	H	ADDED M50B TO THE WIRING DIAG.		BJS
5082	10/24 01	J	ADDED CURRENT TIMER		TSM
5579	7/7 03	K	ADD 90A AND 100A ALTERNATOR AND 12C, 20B, 30B, 35C, & 44A ONLY (WHEN USED)		GA
5674	2/11 04	L	CHANGE REGULATOR		GA
6180	3/13 2006	M	ADDED BALMAR 100 AMP ALT AND REG		RPS

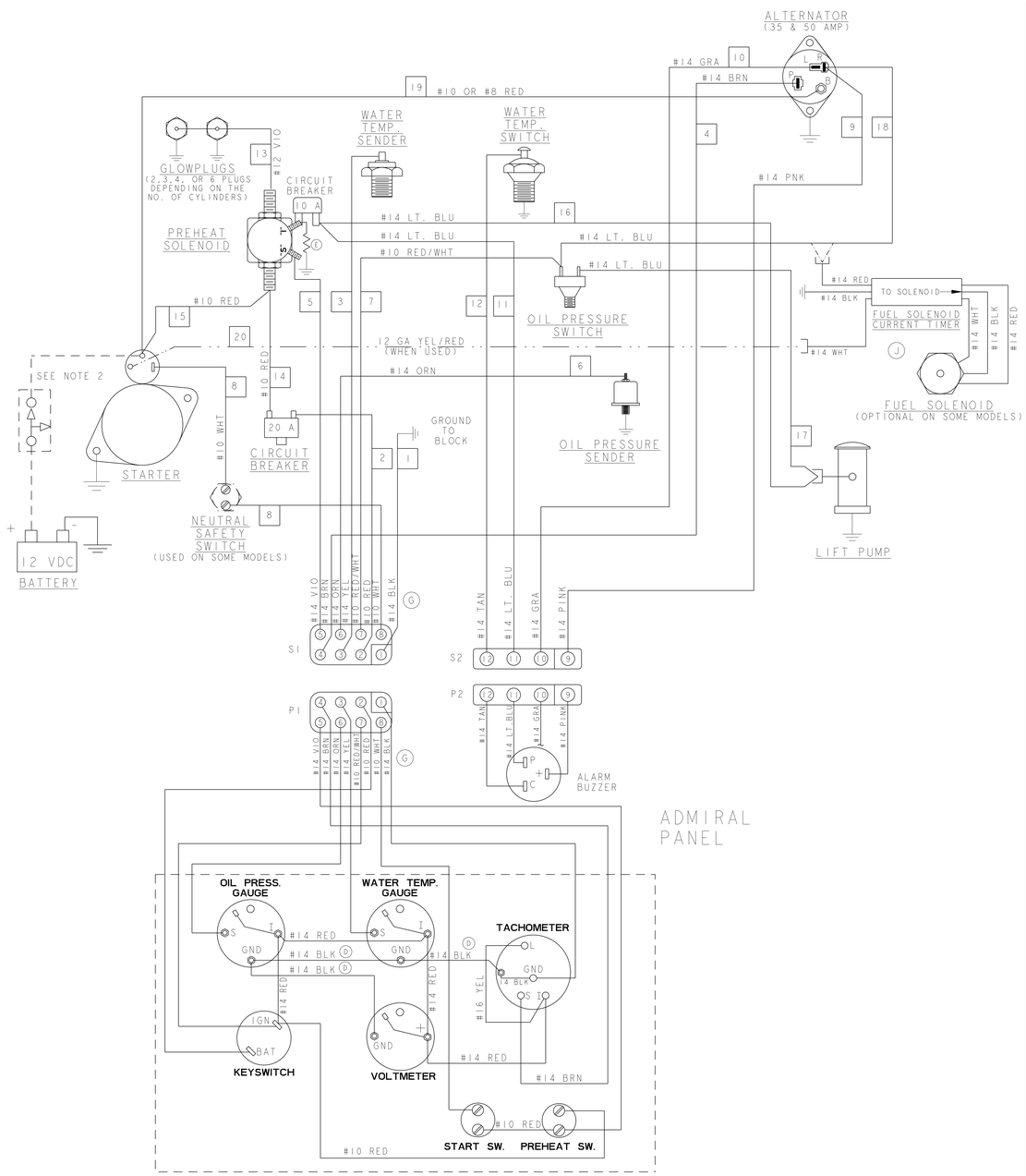

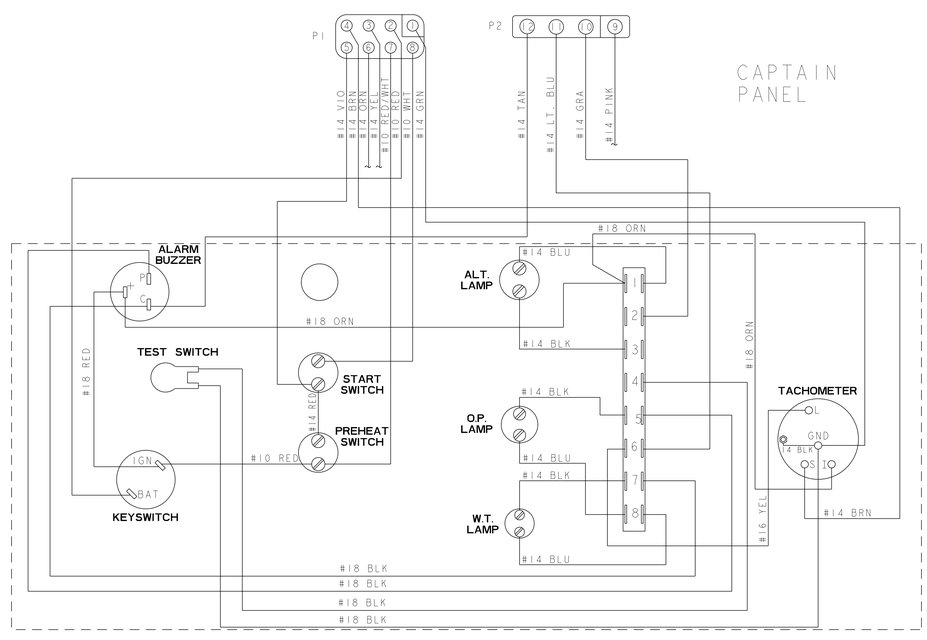

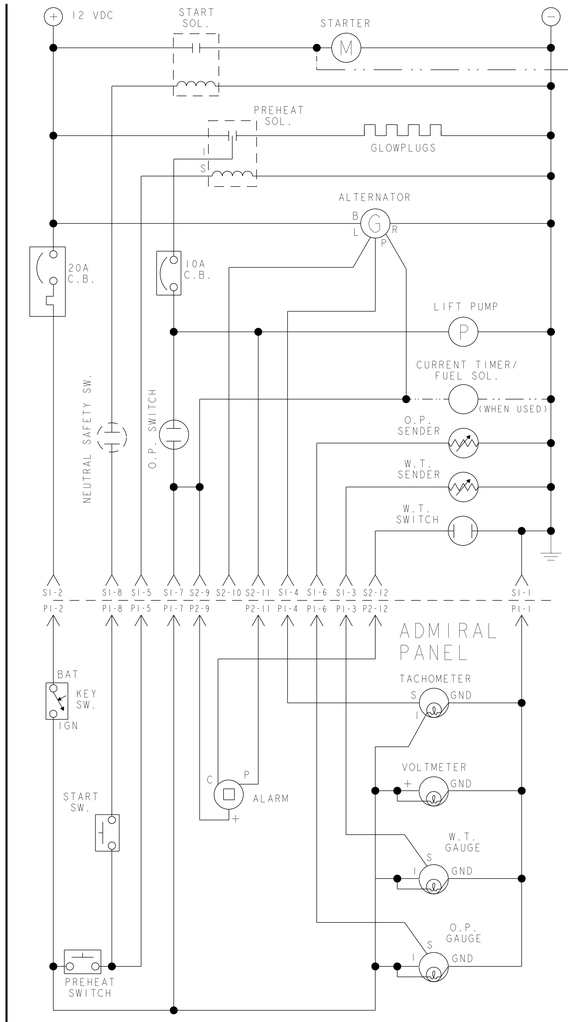

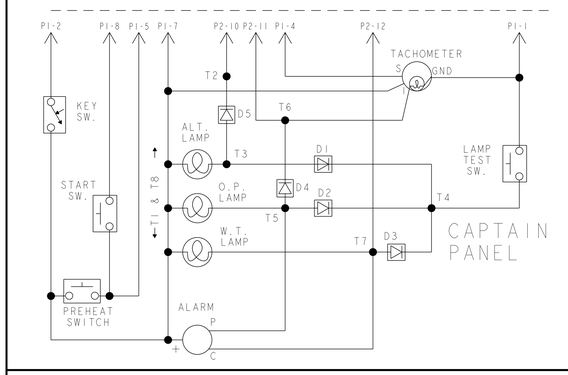

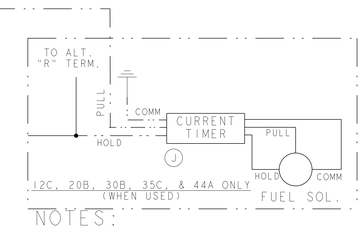

NOTES:

1. THIS PRODUCT IS PROTECTED BY A MANUAL RESET CIRCUIT BREAKER LOCATED NEAR THE STARTER. EXCESSIVE CURRENT WILL CAUSE THE BREAKER TO TRIP AND THE ENGINE WILL SHUT DOWN. THE BUILDER/OWNER MUST BE SURE THAT THE INSTRUMENT PANEL, WIRING, AND ENGINE ARE INSTALLED TO PREVENT CONTACT BETWEEN ELECTRICAL DEVICES AND SEAWATER.
2. AN ON-OFF SWITCH SHOULD BE INSTALLED BETWEEN THE BATTERY AND STARTER TO DISCONNECT THE BATTERY IN AN EMERGENCY AND WHEN LEAVING THE BOAT. A SWITCH WITH A CONTINUOUS RATING OF 175 AMPS, AT 12 VDC WILL SERVE THIS FUNCTION. THIS SWITCH SHOULD NOT BE USED TO MAKE OR BREAK THE CIRCUIT.
3. THE PINK WIRE AT PLUG 2 IS UNUSED AND SHOULD BE INSULATED, CAPTAIN PANEL ONLY.
4. THE GRAY WIRE AT PLUG 2 IS UNUSED AND SHOULD BE INSULATED, ADMIRAL PANEL ONLY.

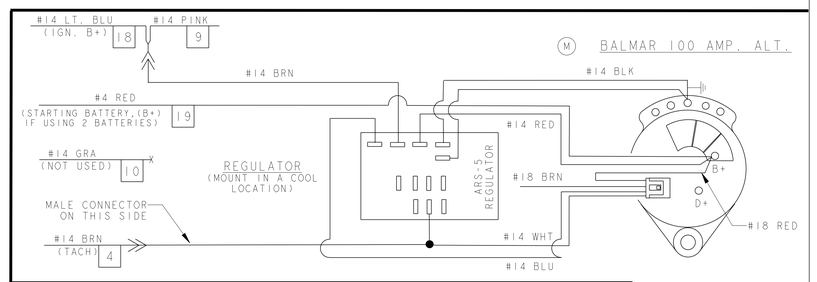

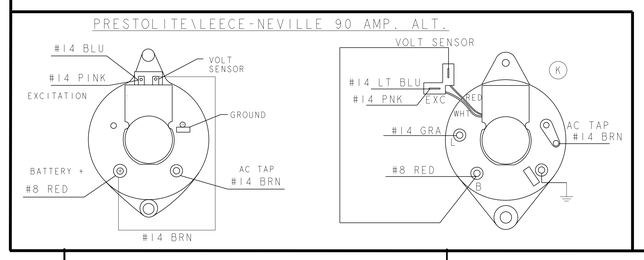

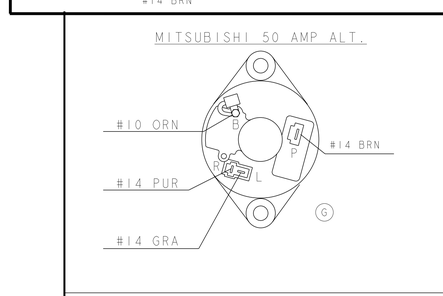

NOTE:
WIRE FOR BATTERY ATTATCHMENT WILL NEED TO BE UPGRADED TO AN 8 GAUGE FROM 10 GAUGE

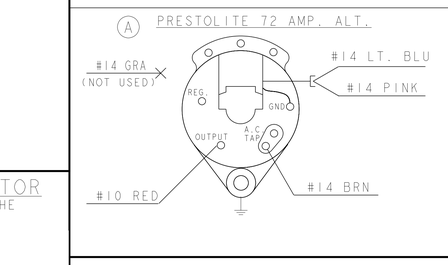

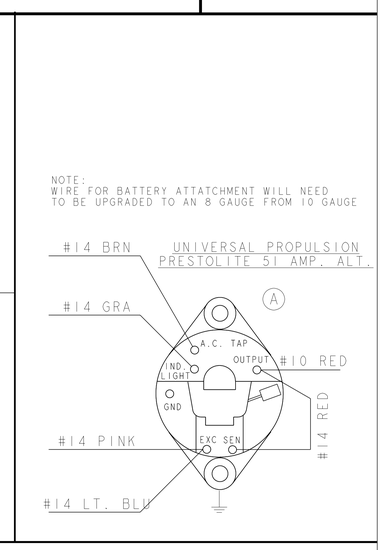

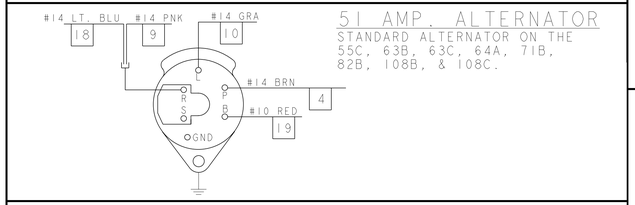

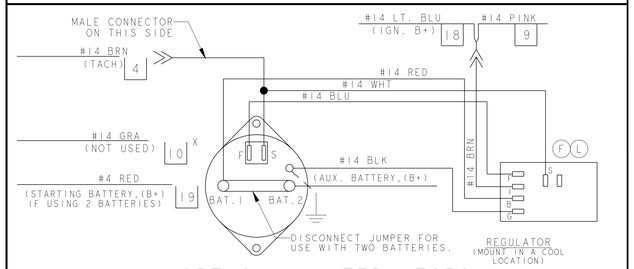

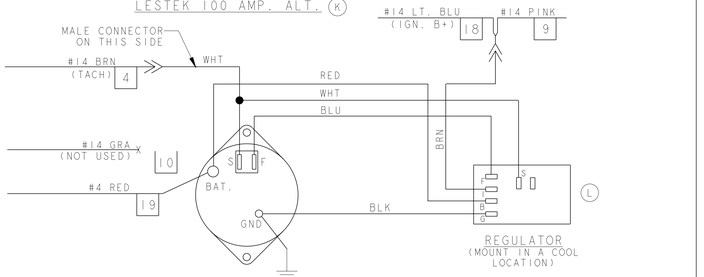

TOLERANCES (UNLESS OTHERWISE NOTED)	WESTERBEKE CORPORATION AVON MA. 02322		
INCHES .XX ±.02 .XXX ±.005 CAST ±.03 ANGLES ±.5° FINISH	MILLIMETERS X. ± .X ± .XX ±	TITLE: WIRING DIAGRAM - ALL MARINE DIESEL PROPULSION ENGINES	
	DRAWN BY: WRM	DATE: 12 AUG 91	MATERIAL: -
DIMENSIONS INCHES / MILLIMETERS (WHEN APPLICABLE)	APPROVED BY	DATE	-
	SCALE: NTS	SIZE: E	DRAWING NUMBER: 39144
	SHT. 1 OF 1		REV. M