ECO NO.	DATE	REV.	REVISION RECORD	AUTH.	DR.BY
2686	3-1 95	A	ADDED NEW OVERSPEED SWITCH AND UPDATED DIAGRAM AND SCHEMATIC. ADDED OLD OVERSPEED DETAIL		WRM
2729	4-19 95	B	CHNG'D #16 RED/PUR FROM OS-T47TB3-2 TO OS-T47TB3-1 UPDATED BOTH SCHEMATIC AND DIAGRAM		MKM
3925	12/18 98	C	ADDED CAPACITOR TO SUPPRESS STARTER NOISE		MMM

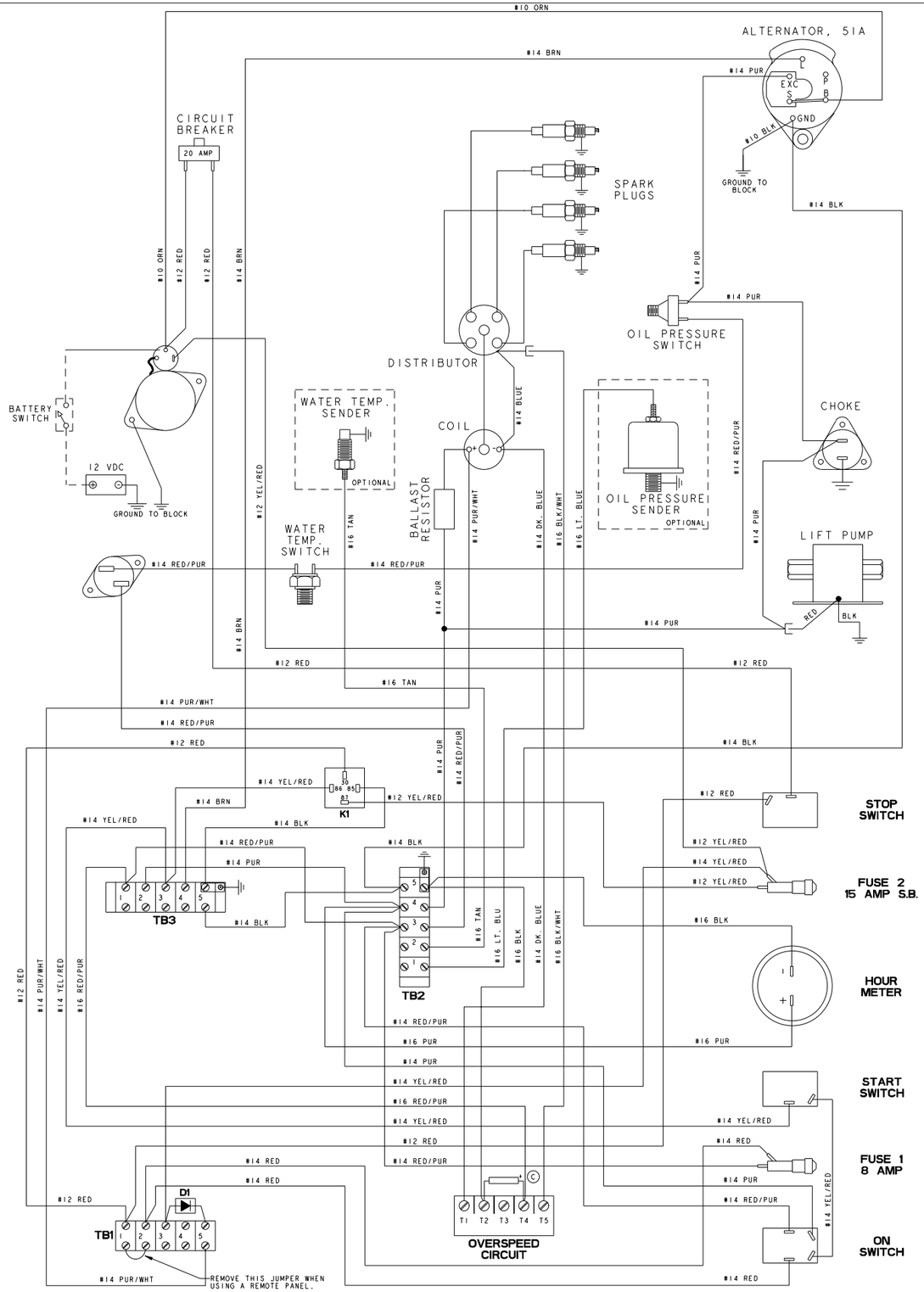

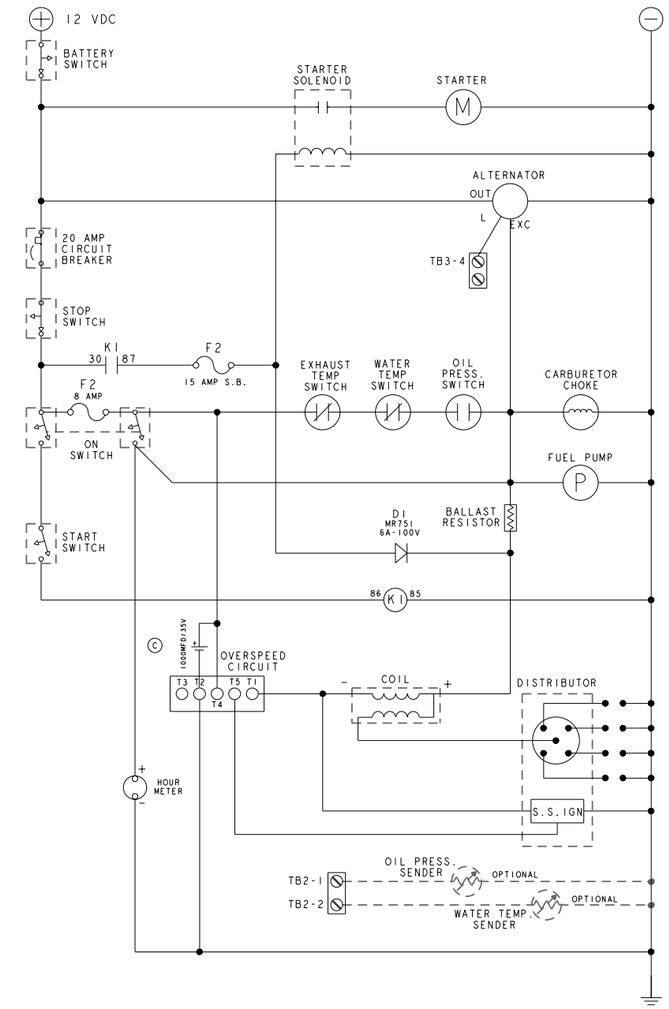

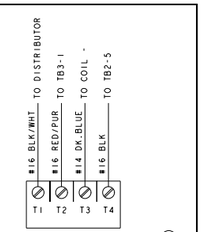

OVERSPEED SWITCH

(ORIGINAL OVERSPEED SWITCH CONNECTIONS)

TOLERANCES (UNLESS OTHERWISE NOTED)	WESTERBEKE CORPORATION AVON MA. 02322		
INCHES / MILLIMETERS .XX ±.02 / X. ±; .XXX ±.005 / .X ±; CAST ±.03 / .XX ±; ANGLES ±.5°; FINISH 63	TITLE WIRING DIAGRAM, 20.0 KW.BEG AND 25.0 BEG GASOLINE GENSETS		
	DRAWN BY WRM	DATE 18 AUG 94	MATERIAL: -
DIMENSIONS INCHES / MILLIMETERS (WHEN APPLICABLE)	APPROVED BY	DATE	
	SCALE -	SIZE E	DRAWING NUMBER 40620
	SHT. 1 OF 1		REV. C