ECO NO.	DATE	REV.	REVISION RECORD	AUTH.	DR.BY

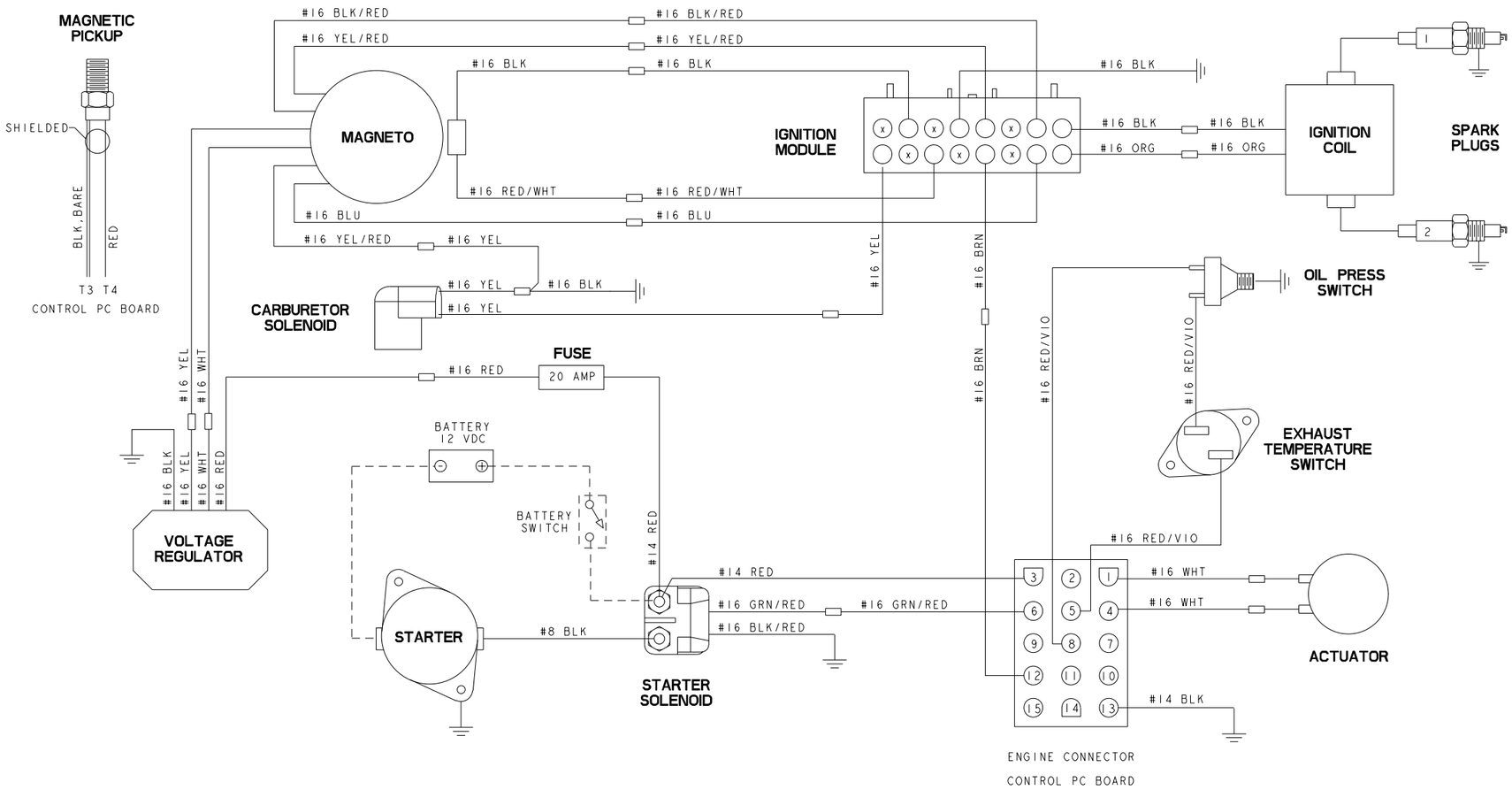

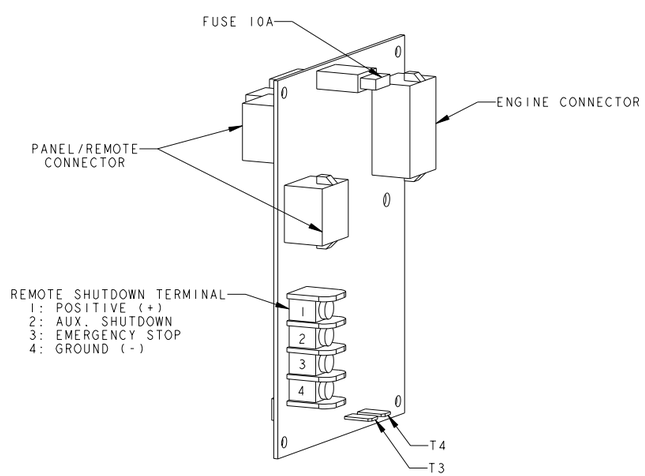

CONTROL PC BOARD

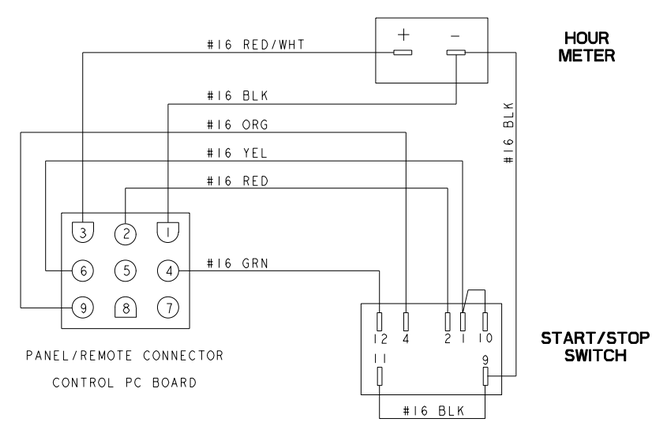

TOLERANCES (UNLESS OTHERWISE NOTED)	WESTERBEKE CORPORATION TAUNTON, MA. 02780			
INCHES: .XX ±.02, .XXX ±.005, CAST ±.03, ANGLES ±.5, FINISH 63 / MILLIMETERS: X. ±1.0, .X ±.5, .XX ±.13	TITLE: WIRING DIAGRAM 3.0 BPMG			
	DRAWN BY: Jeremy Anderson	DATE: 12/Sep/02	MATERIAL: ---	
DIMENSIONS INCHES / MILLIMETERS (WHEN APPLICABLE)	APPROVED BY	DATE	---	
	SCALE DRAWING	SIZE: D	DRAWING NUMBER: 46987	REV. -
	SHT. 1 OF 1			