ECO NO.	DATE	REV.	REVISION RECORD	AUTH.	DR.BY
5467	2/11 2003	A	ADDED COIL RELAY		JCA
5545	4/25 2003	B	ADDED WATER TEMP SWITCH		JCA
6117	10/25 2005	C	ADDED FIRE BOY CONNECTION DIAGRAM.		GA

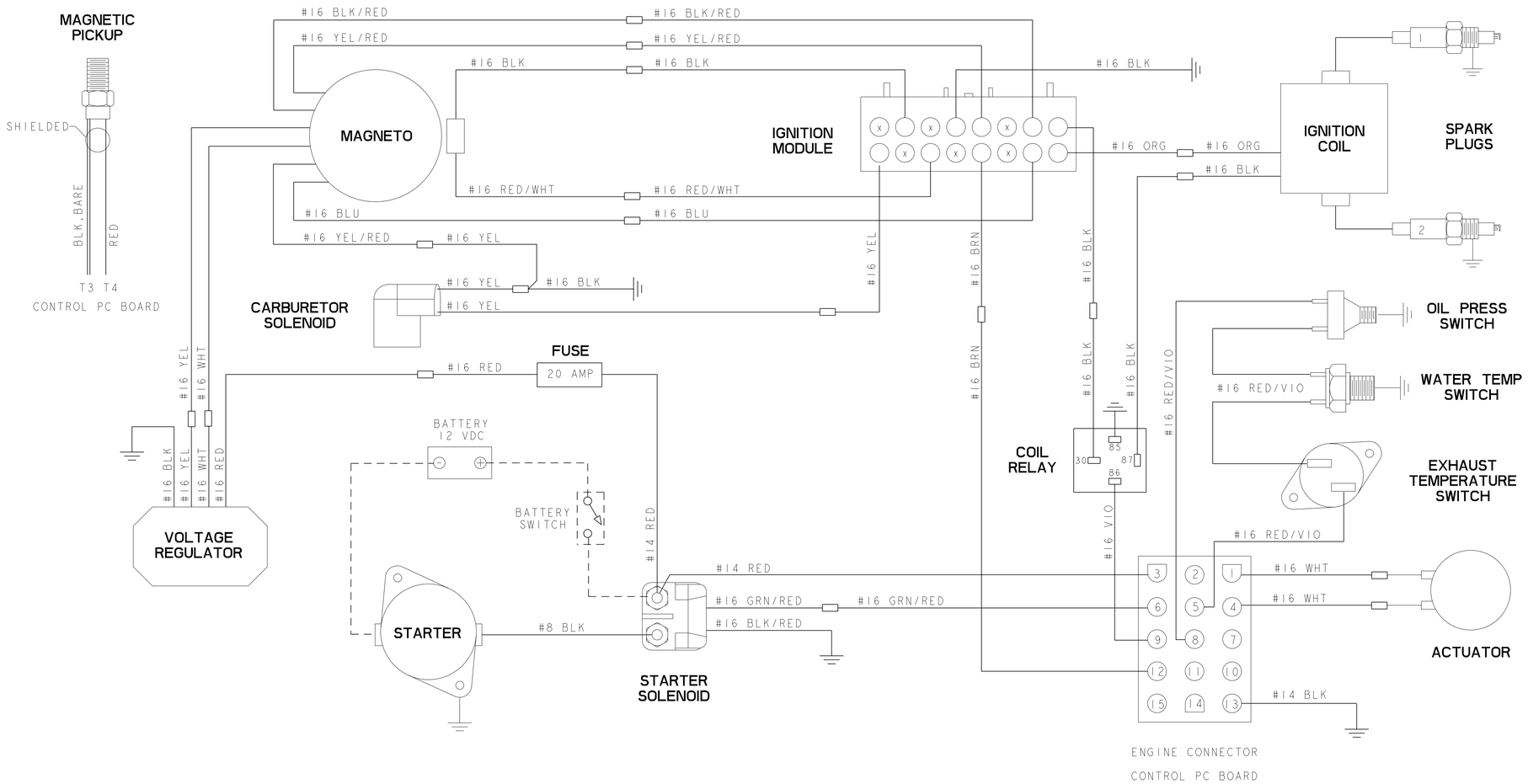

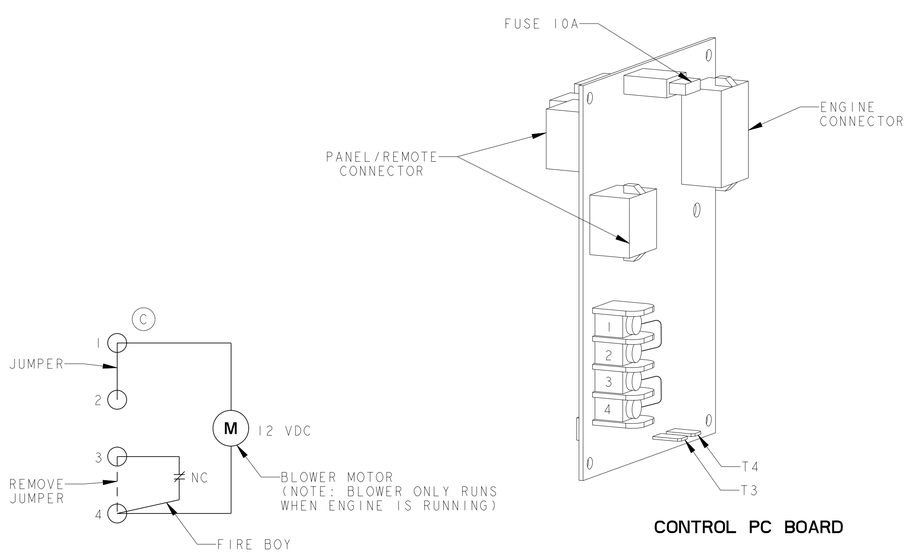

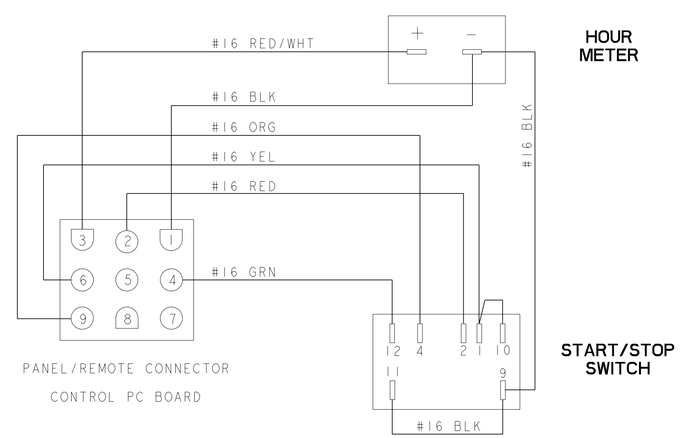

TOLERANCES (UNLESS OTHERWISE NOTED)	WESTERBEKE CORPORATION TAUNTON, MA. 02780			
INCHES .XX ±.02 .XXX ±.005 CAST ±.03 ANGLES: ±.5° FINISH 63 / MILLIMETERS .X. ± 1.0 .X ± .5 .XX ± .13	TITLE WIRING DIAGRAM 3.0 BPMG ---			
DIMENSIONS INCHES / MILLIMETERS (WHEN APPLICABLE)	DRAWN BY Jeremy Anderson	DATE 12/Sep/02	MATERIAL: --- --- ---	
	APPROVED BY	DATE		
	SCALE NONE	SIZE D	DRAWING NUMBER 46987	REV. C
	SHT. 1 OF 1			