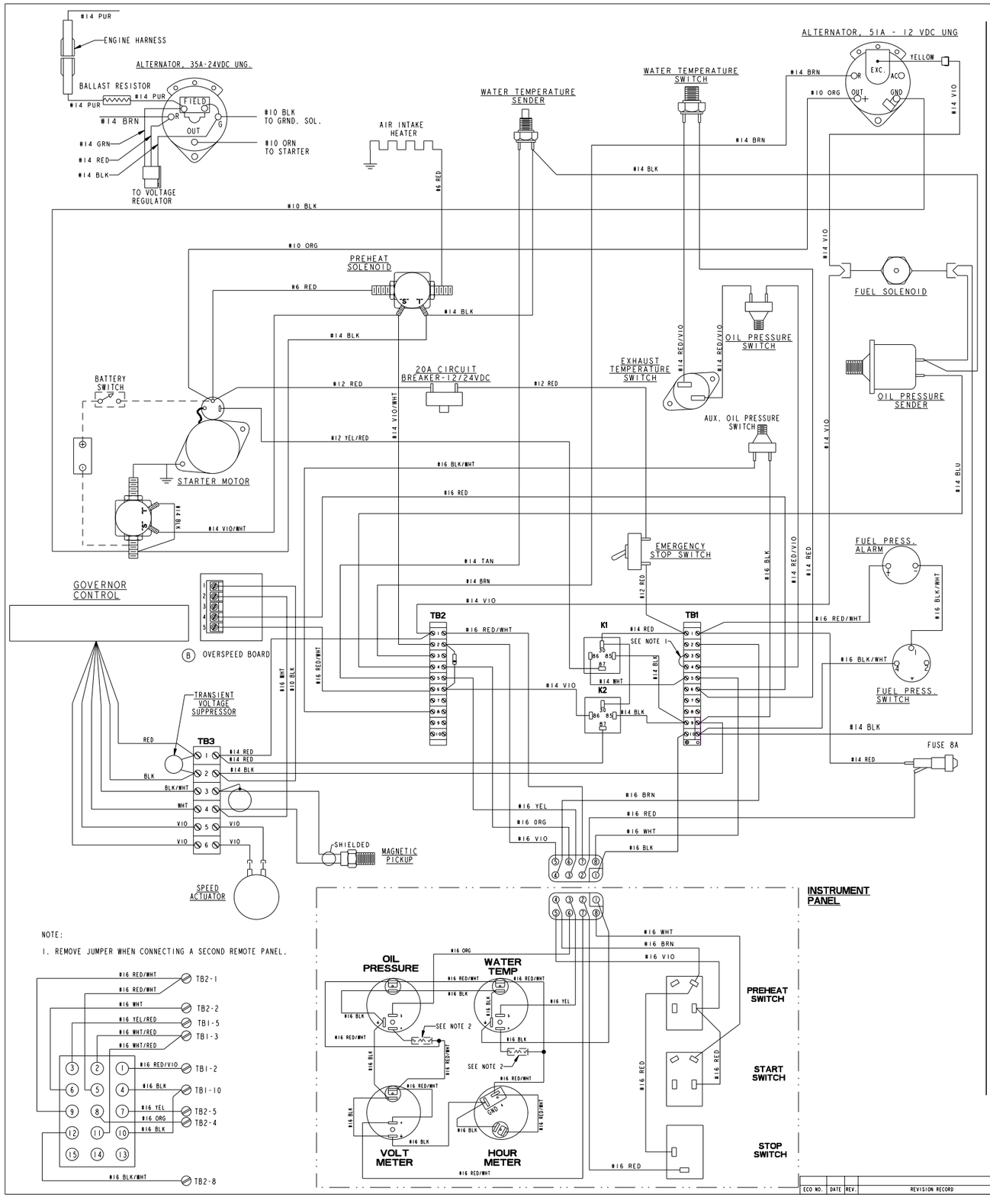

NOTE:

1. REMOVE JUMPER WHEN CONNECTING A SECOND REMOTE PANEL.

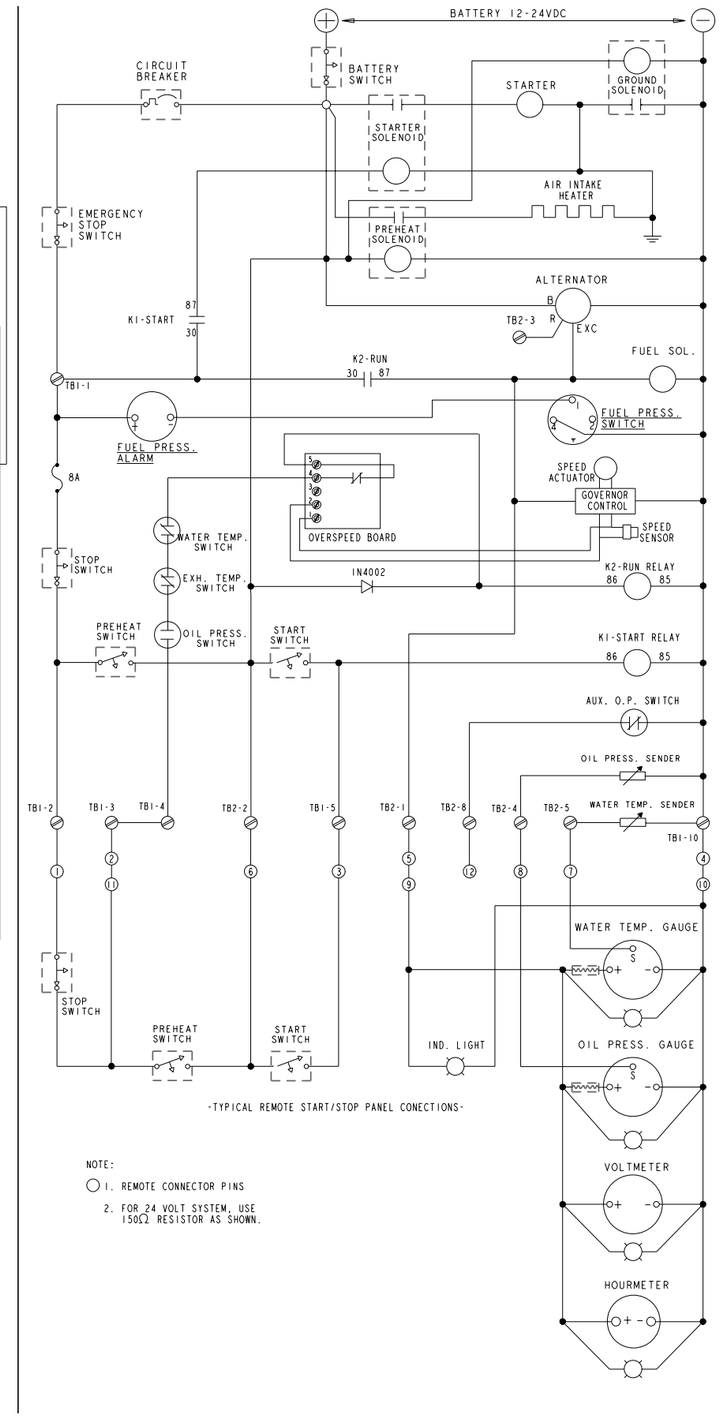

-TYPICAL REMOTE START/STOP PANEL CONECTIONS-

NOTE:

1. REMOTE CONNECTOR PINS
2. FOR 24 VOLT SYSTEM, USE 150Ω RESISTOR AS SHOWN.

TOLERANCES (UNLESS OTHERWISE NOTED)	WESTERBEKE CORPORATION AVON MA. 02322		
INCHES .XX ±.02 .XXX ±.005 CAST ±.03 ANGLES ±3° FINISH 63 / MILLIMETERS .X ± .X ± .XX ±	TITLE WIRING DIAGRAM/SCHEMATIC,32.0 BEDA 12-24VDC DOUBLE WALL UNGD - SRC		
DIMENSIONS ← INCHES / MILLIMETERS → (WHICH APPLICABLE)	DRAWN BY GA	DATE 4/JUNE/03	MATERIAL:
	APPROVED BY	DATE	
	SCALE NONE	SIZE E	DRAWING NUMBER 48513
	SHT. 1 of 1		REV.

ECO NO.	DATE	REV.	REVISION RECORD	AUTH.	DR.BY	ECO NO.	DATE	REV.	REVISION RECORD	AUTH.	DR.BY