ECO NO.	DATE	REV.	REVISION RECORD	AUTH.	DR.BY
3285	2/5 98	A	ADDED RELAY. REDREW SCHEMATIC TO CLARIFY CONNECTIONS		BRN
4664	8/1 04	B	ADDED TRANSIENT VOLTAGE SUPPRESSOR TO CIRCUIT		TSM

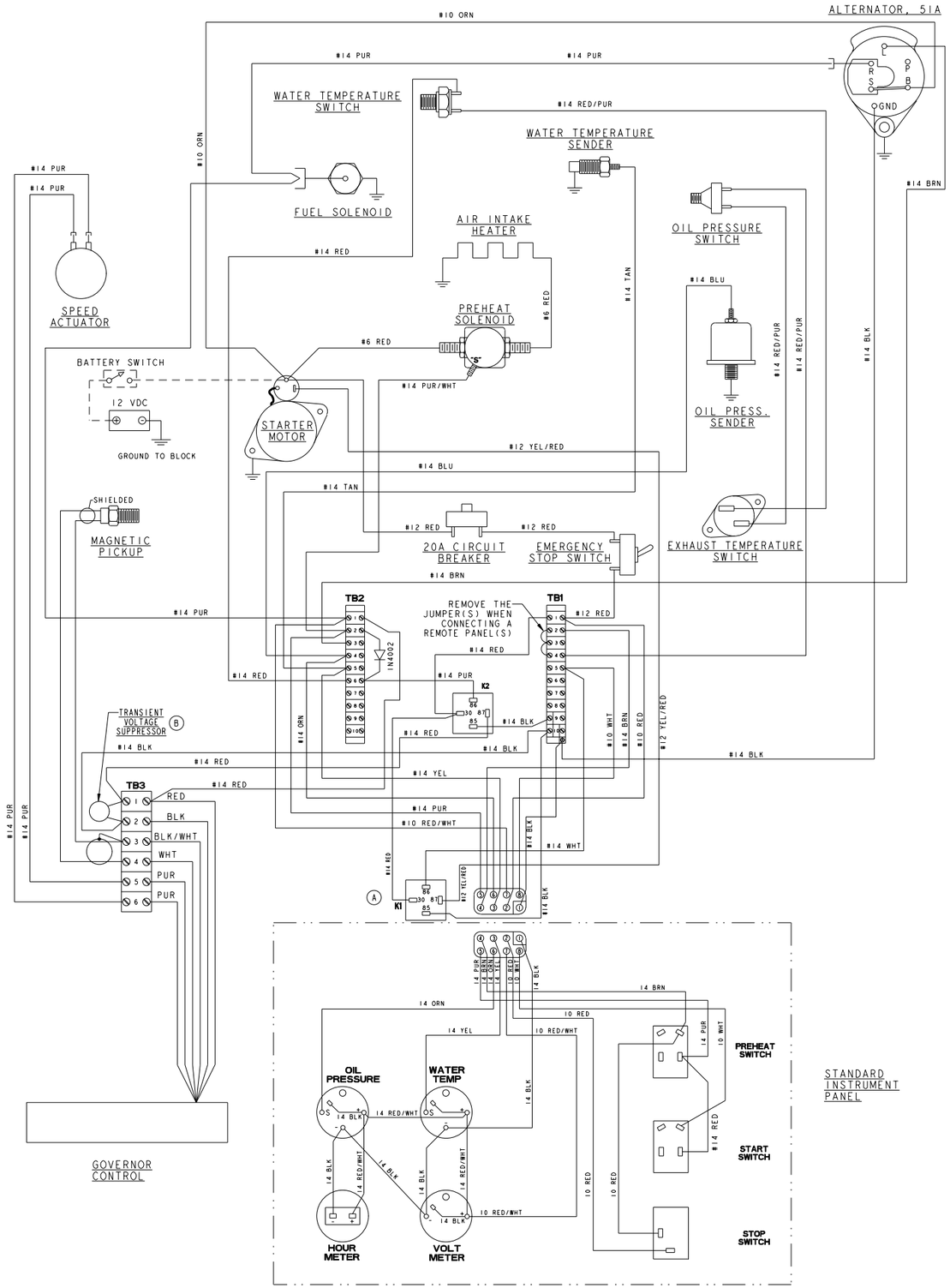

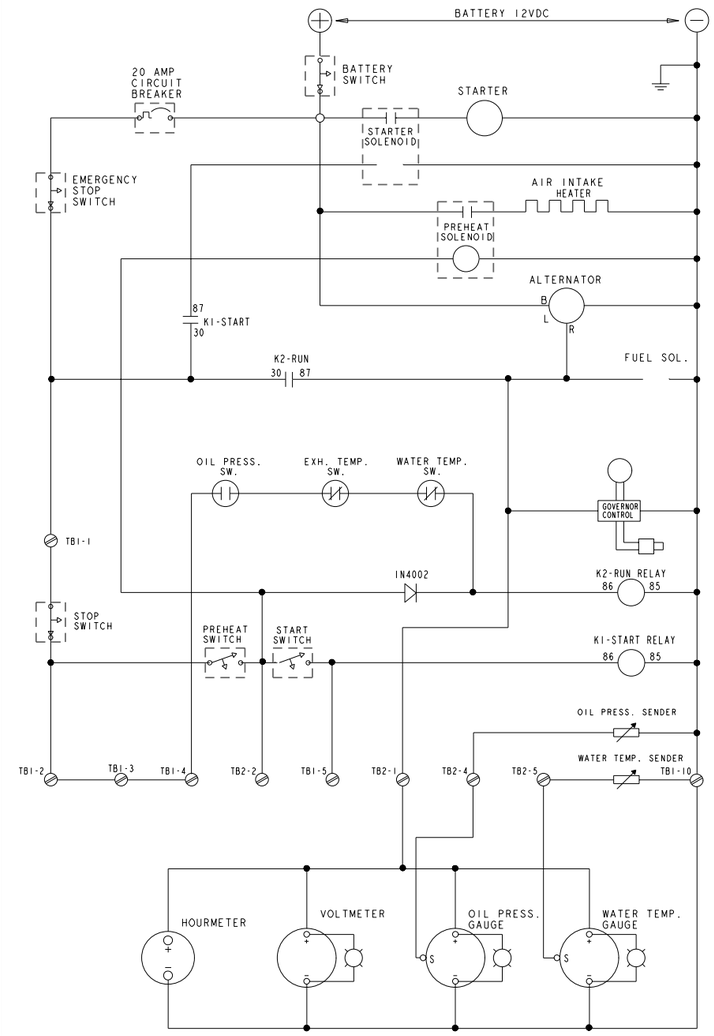

TOLERANCES (UNLESS OTHERWISE NOTED)	WESTERBEKE CORPORATION AVON MA. 02322		
INCHES .XX ±.02 .XXX ±.005 CAST ±.03 ANGLES ±2° FINISH 63	MILLIMETERS X ± .X ±.XX ±	TITLE WIRING DIAGRAM, 32.0 KW BEDA WITH ELECTRONIC GOVERNING	
		DRAWN BY BRM / DATE 18/Mar/94	MATERIAL:
DIMENSIONS INCHES MILLIMETERS (WHEN APPLICABLE)		APPROVED BY / DATE	
		SCALE N/A / SIZE E / DRAWING NUMBER 40425	REV. B
		SHT. 1 OF 1	