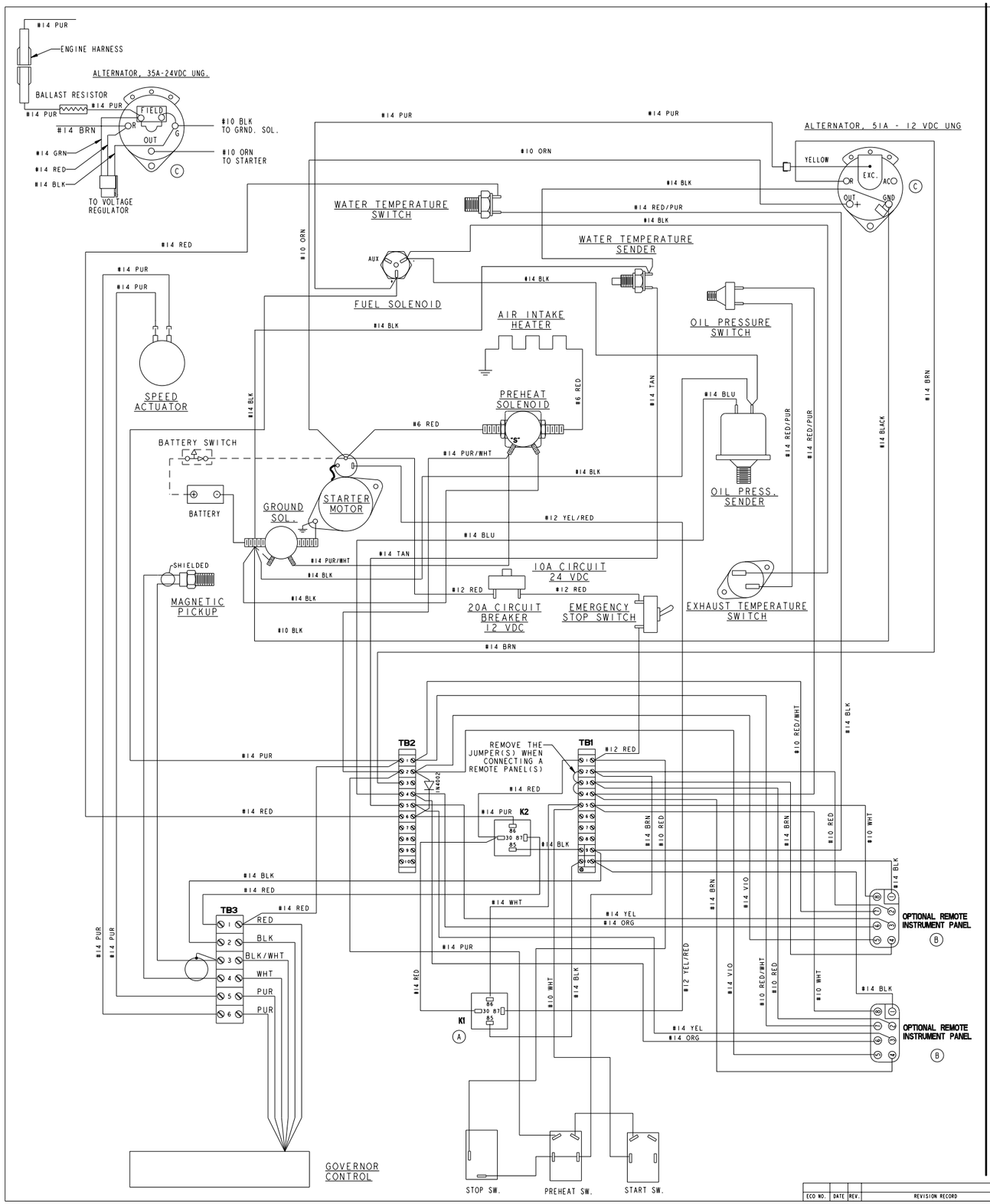

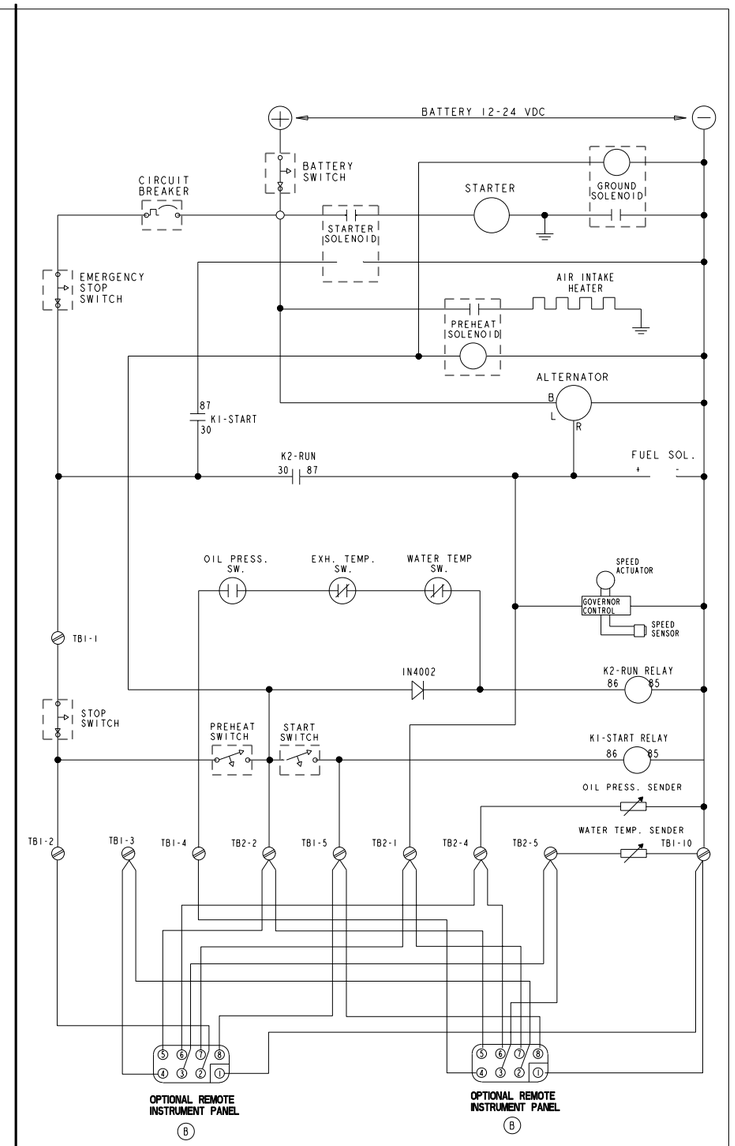

ECO NO.	DATE	REV.	REVISION RECORD	AUTH.	DR.BY
4863	3/30 /00	C	CHANGED WIRING TO INCLUDE 24 VOLT. UPDATED ALTERNATOR SCHEMATICS.		RM
3673	3/25 /98	B	ASSED OPTIONAL REMOTE PANELS		BRN
3647	3/3 /98	A	ADD RELAY TO ENERGIZE STARTER SOLENOID. REDRAW DIAGRAM AND SCHEMATIC TO STANDARDS.		BRN

TOLERANCES (UNLESS OTHERWISE NOTED)

	INCHES	MILLIMETERS
.XX	±.02	X ±
.XXX	±.005	.XX ±
CAST	±.03	.XX ±
ANGLES	±2°	
FINISH	63	

DIMENSIONS INCHES [MILLIMETERS] (WHEN APPLICABLE)

WESTERBEKE CORPORATION
AVON MA. 02322

TITLE: WIRING DIAGRAM, 32KW BEDA UNGRND WITH ELECT. GOV. 12/24VDC

DRAWN BY	DATE	MATERIAL
BRN	3/18/98	

APPROVED BY | DATE

SCALE	SIZE	DRAWING NUMBER	REV.
NONE	E	41486	C

SHT. 1 OF 1