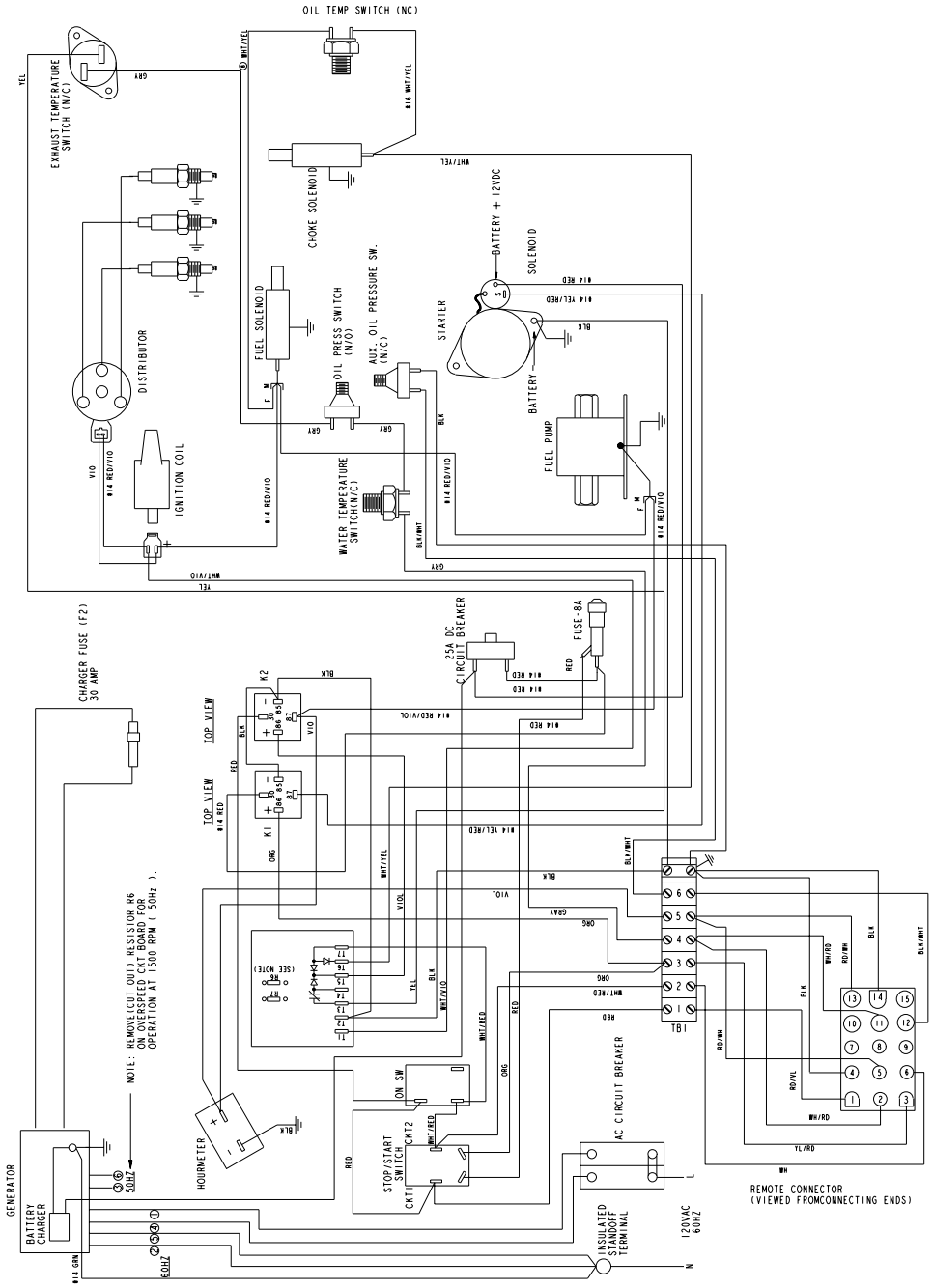

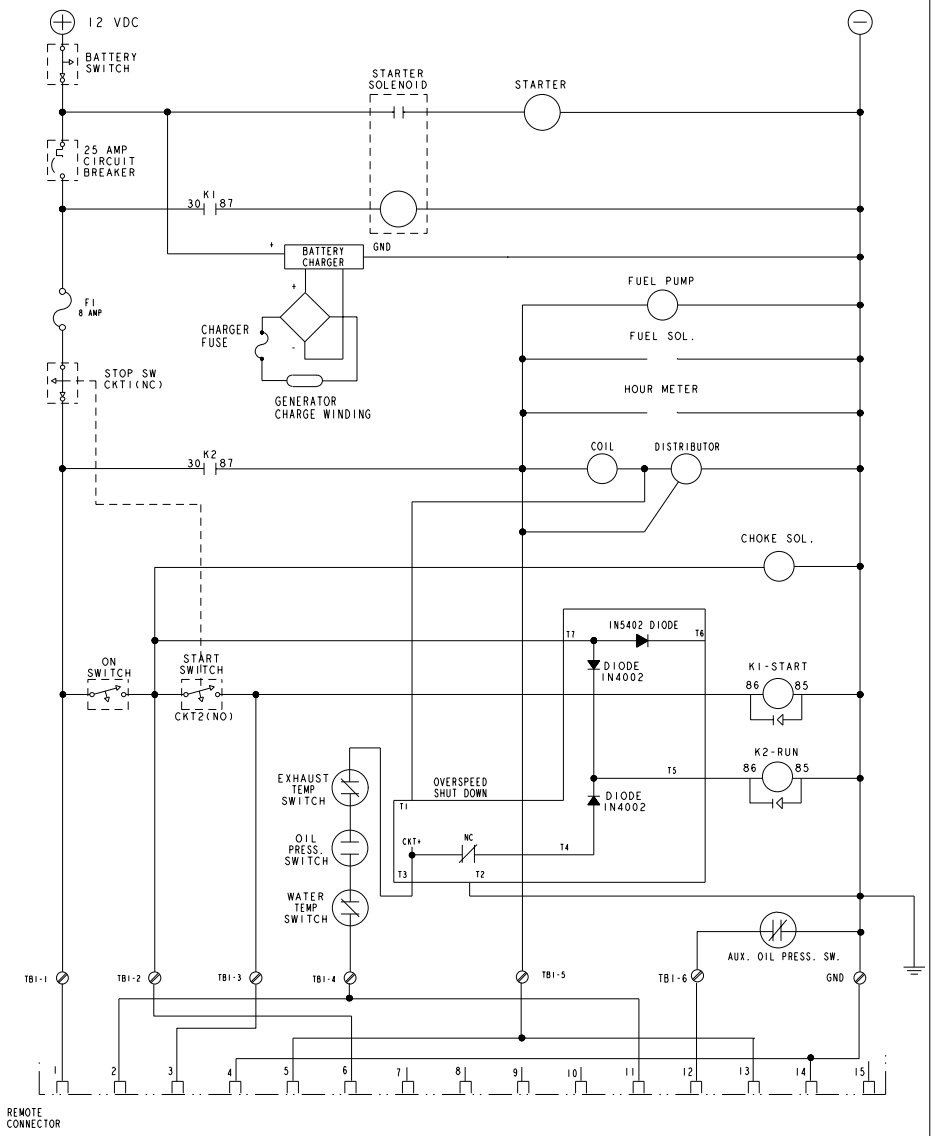

NOTES:
1. ALL WIRE #16AWG(105DEG C 600V-ALPHA# 1858/19-MIL-W-16878D TYPE B) UNLESS SPECIFIED OTHERWISE.
2. WARNING - RELAYS K1, K2 HAVE INTERNAL DIODES ACROSS THEIR COILS, POLARITY AS INDICATED MUST BE MAINTAINED TO AVOID DAMAGE TO THE RELAYS.

ECO NO.	DATE	REV.	REVISION RECORD	AUTH.	DR.BY

ECO NO.	DATE	REV.	REVISION RECORD	AUTH.	DR.BY

TOLERANCES (UNLESS OTHERWISE NOTED)
INCHES: .XX ±.02, .XXX ±.005, CASTS ±.03, ANGLES ±1°, FINISH 63
MILLIMETERS: .X ± 1.0, .XX ± .5, .XXX ± .13
DIMENSIONS: INCHES / MILLIMETERS (CHECK APPLICABILITY)

WESTERBEKE CORPORATION
TAUNTON, MA. 02780

TITLE: WIRING AND SCHEMATIC DIAGRAM CARB - 2 POLE (SEARAY)

DRAWN BY: JCC | DATE: 11/Nov/99 | MATERIAL: -
APPROVED BY: | DATE: -
SCALE: NONE | SIZE: E | DRAWING NUMBER: 43847 | REV. -
SHT. 1 OF 1