ECO NO.	DATE	REV.	REVISION RECORD	AUTH.	DR.BY
4670	8/4 2006	A	ADD VOLTAGE SUPPRESSOR BETWEEN TB3-1, TB3-2		JCA

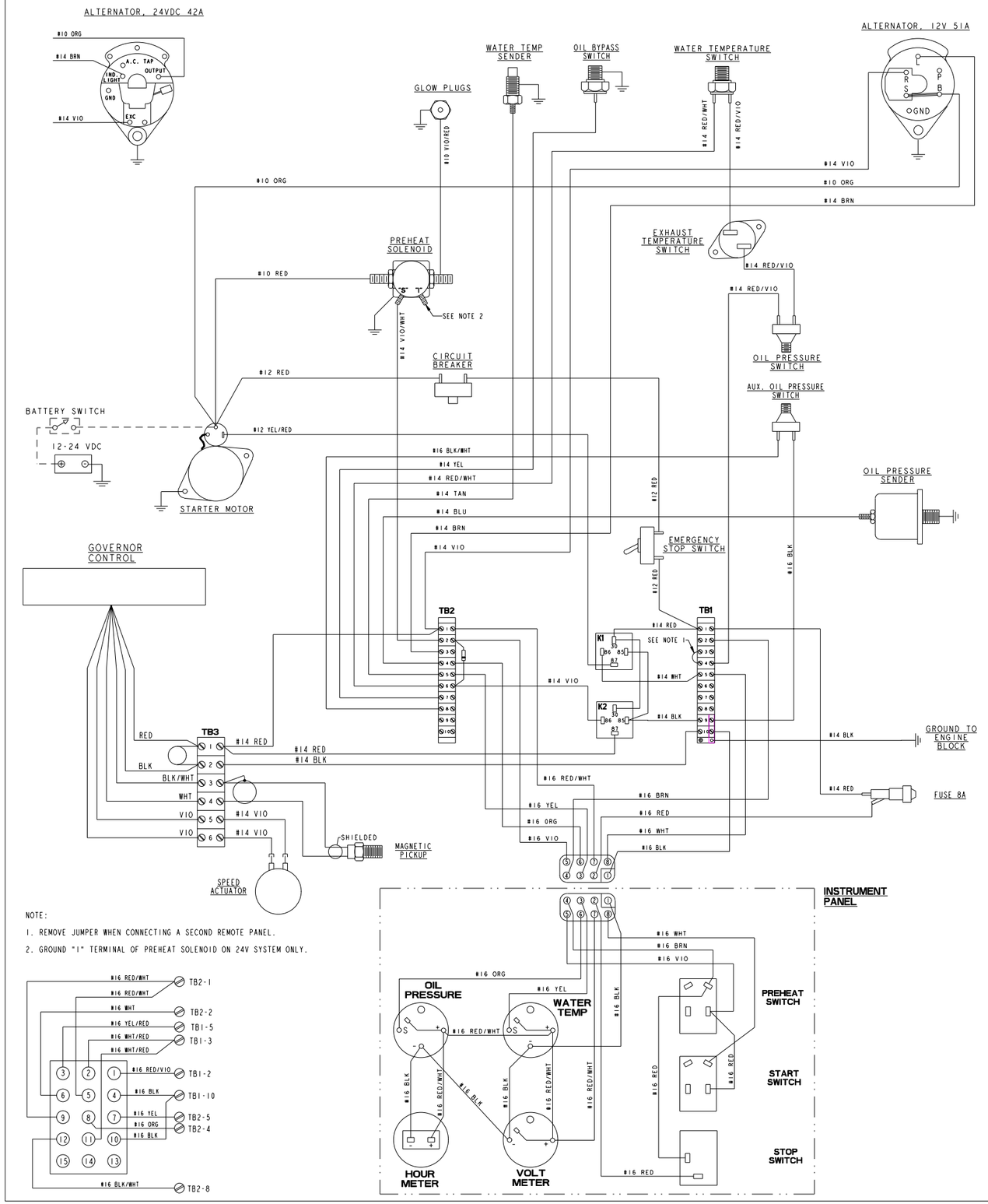

NOTE:

1. REMOVE JUMPER WHEN CONNECTING A SECOND REMOTE PANEL.
2. GROUND "I" TERMINAL OF PREHEAT SOLENOID ON 24V SYSTEM ONLY.

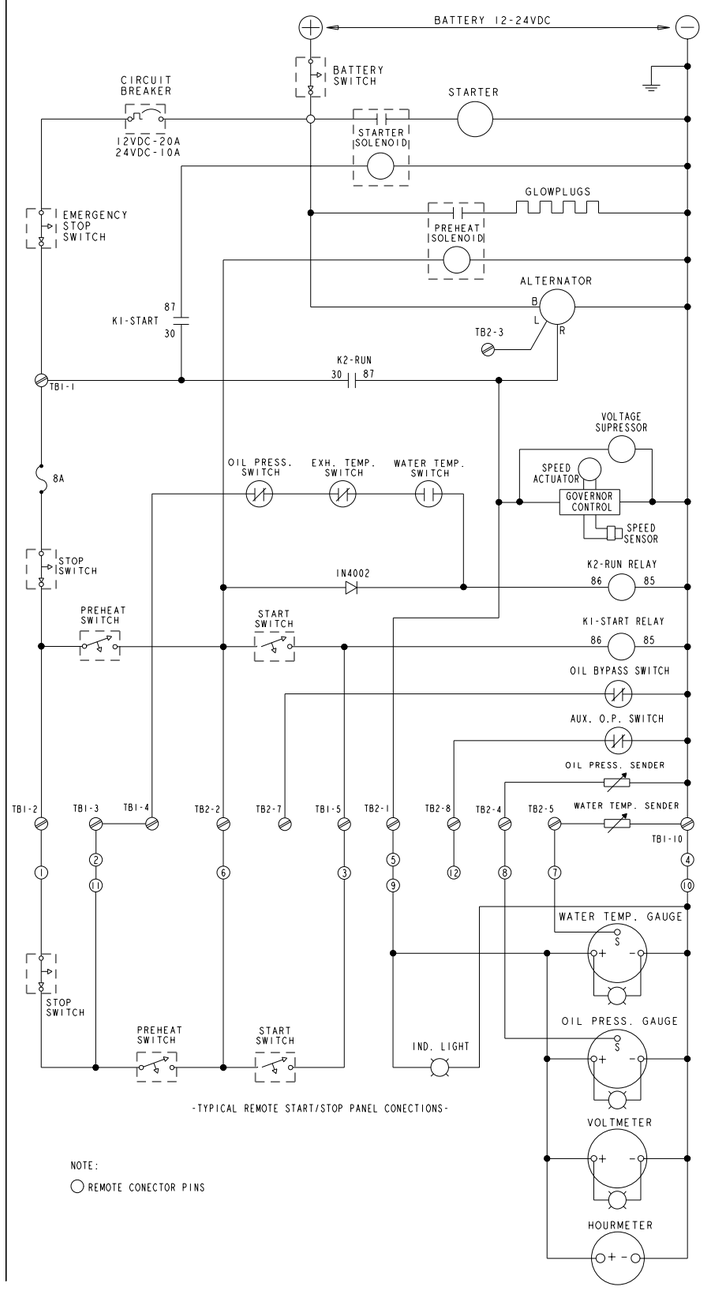

-TYPICAL REMOTE START/STOP PANEL CONECTIONS-

NOTE:

○ REMOTE CONECTOR PINS

TOLERANCES (UNLESS OTHERWISE NOTED)		WESTERBEKE CORPORATION AVON MA. 02322		
INCHES	MILLIMETERS	TITLE WIRING DIAGRAM/SCHEMATIC MARINE GENERATOR		
.XX ±.02	X. ±	DRAWN BY ANDREW ROSS	DATE 19/Apr/00	MATERIAL:
.XXX ±.005	.X ±	APPROVED BY	DATE	
CAST ±.03	.XX ±			
ANGLES ±.5°				
FINISH		SCALE	SIZE E	DRAWING NUMBER 44780
DIMENSIONS INCHES MILLIMETERS (WHEN APPLICABLE)		SHT. 1 OF 1		REV. A