ECO NO.	DATE	REV.	REVISION RECORD	AUTH.	DR.BY
5683	2-25-04	A	ADD OVERSPEED BOARD		GA

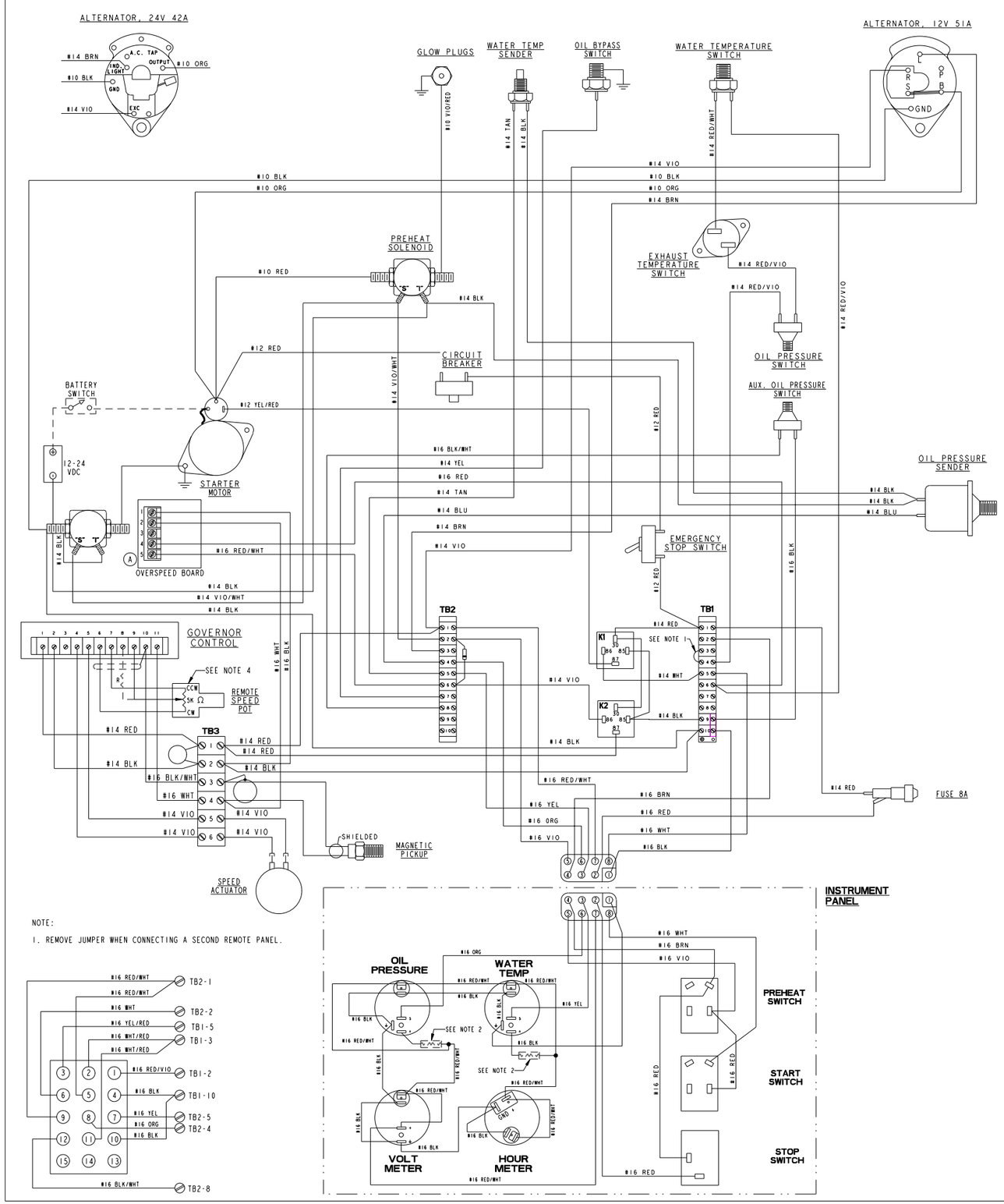

NOTE:

1. REMOVE JUMPER WHEN CONNECTING A SECOND REMOTE PANEL.

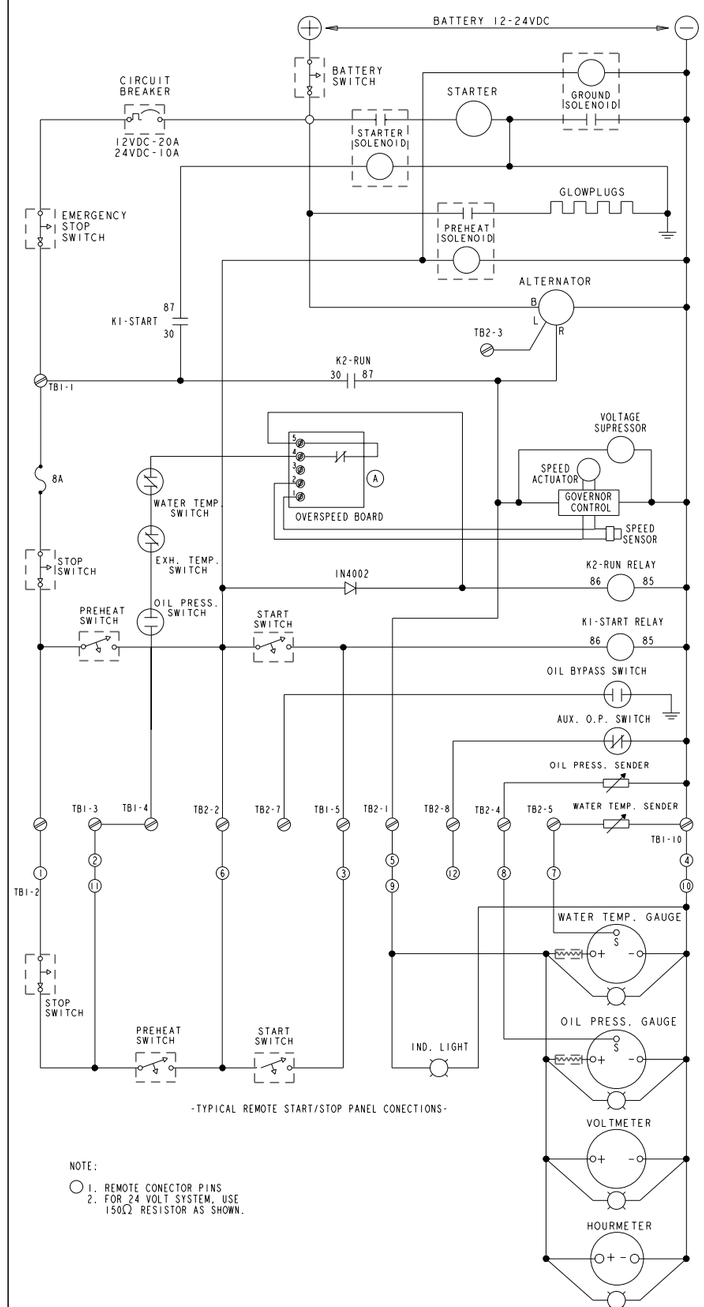

-TYPICAL REMOTE START/STOP PANEL CONECTIONS-

NOTE:

1. REMOTE CONECTOR PINS
2. FOR 24 VOLT SYSTEM, USE 150Ω RESISTOR AS SHOWN.

TOLERANCES (UNLESS OTHERWISE NOTED)	WESTERBEKE CORPORATION AVON MA. 02322			
INCHES / MILLIMETERS	TITLE: WIRING DIAGRAM/SCHEMATIC MARINE GENERATOR - UNGND / PARALLEL			
DRAWN BY: Jeremy Anderson	DATE: 06/Oct/03	MATERIAL:		
DIMENSIONS INCHES / MILLIMETERS (WHICH APPLICABLE)	APPROVED BY	DATE		
SCALE	SHT. 1 of 1	SIZE: E	DRAWING NUMBER: 48910	REV.: A