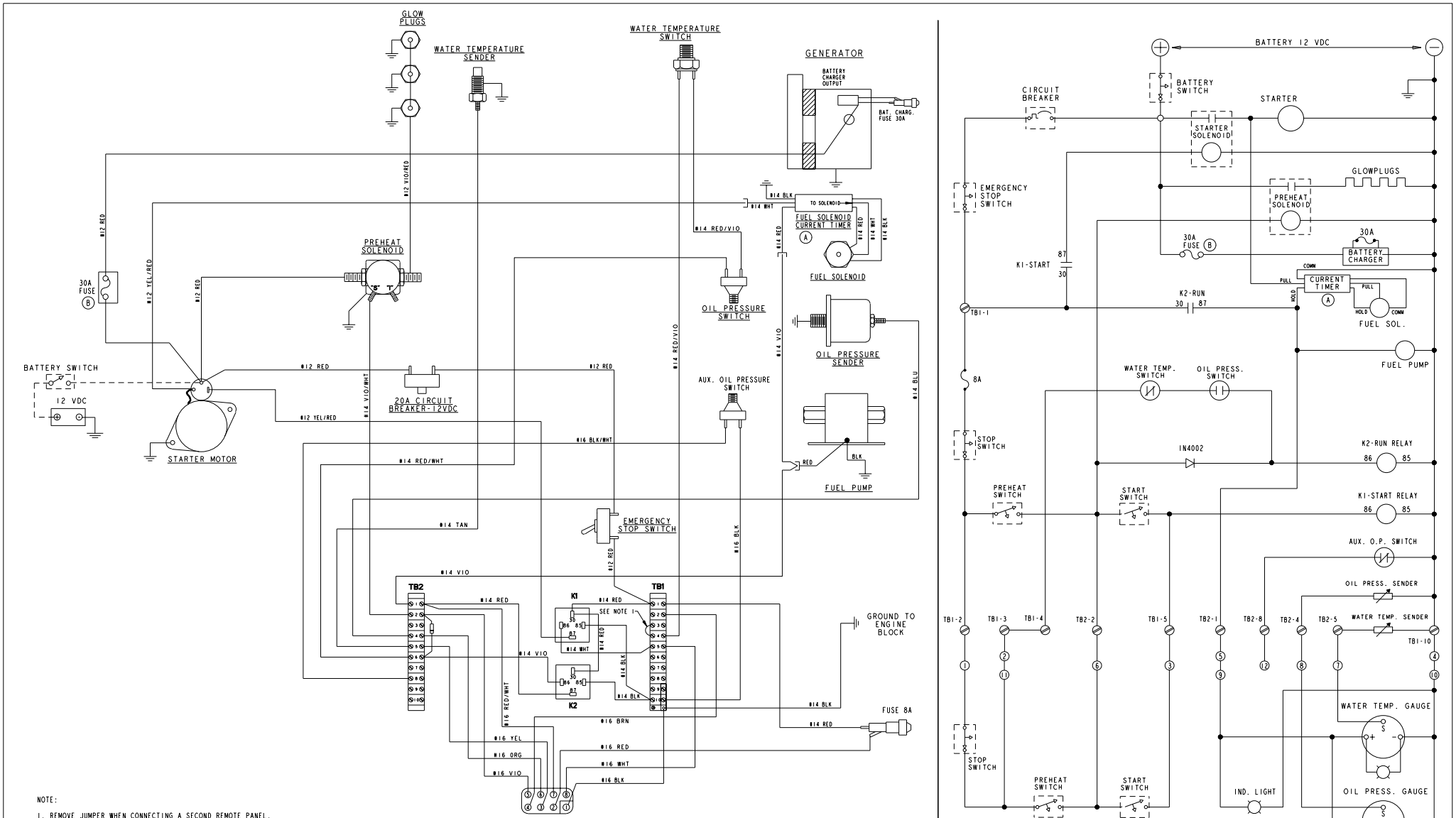

NOTE:

1. REMOVE JUMPER WHEN CONNECTING A SECOND REMOTE PANEL.

ECO NO.	DATE	REV.	REVISION RECORD	AUTH.	DR.BY
5610	9-17-2003	B	ADDED 30A FUSE TO BATTERY CHARGER CONNECTION; REROUTE BATTERY CHARGER CONNECTION TO STARTER INSTEAD OF CIRCUIT BREAKER		GA
5082	10/24/01	A	ADDED CURRENT TIMER		TSM

TOLERANCES (UNLESS OTHERWISE NOTED)
INCHES .XX ±.02 .XXX ±.005 CAST ±.03 ANGLES ±.5° FINISH 63°
MILLIMETERS X. ± .X ± .XX ±
DIMENSIONS INCHES MILLIMETERS (WHEN APPLICABLE)

WESTERBEKE CORPORATION
AVON MA. 02322

TITLE: WIRING DIAGRAM/SCHEMATIC, 5.0 BCDR - SRC

DRWN BY: MPO | DATE: 16/Mar/00 | MATERIAL: -
APPROVED BY: | DATE: | -
SCALE: NONE | SIZE: E | DRAWING NUMBER: 44742 | REV. B
SHT. 1 OF 1