ECO NO.	DATE	REV.	REVISION RECORD	AUTH.	DR.BY
2196	6-16 93	A	TERMINAL BLOCK TB1 WAS A 4 POSITION BLOCK AND TB2 WAS A FIVE POSITION BLOCK, NOW BOTH BLOCKS ARE 10 POSITION BLOCKS.		WRM
2960	4-16 96	B	ADDED TWO REMOTE PANELS; ADDED RELAY.		MRK
3088	10/16 96	C	REVISE SCHEMATIC DRAWING		BRN
3111	11/8 96	D	UPDATE PRINT TO CURRENT STANDARDS		BRN
3768	6/9 98	E	ADDED SECOND RELAY, REMOVED OPTIONAL REMOTE PANELS REDREW SCHEMATIC TO CLARIFY CONNECTIONS		MB

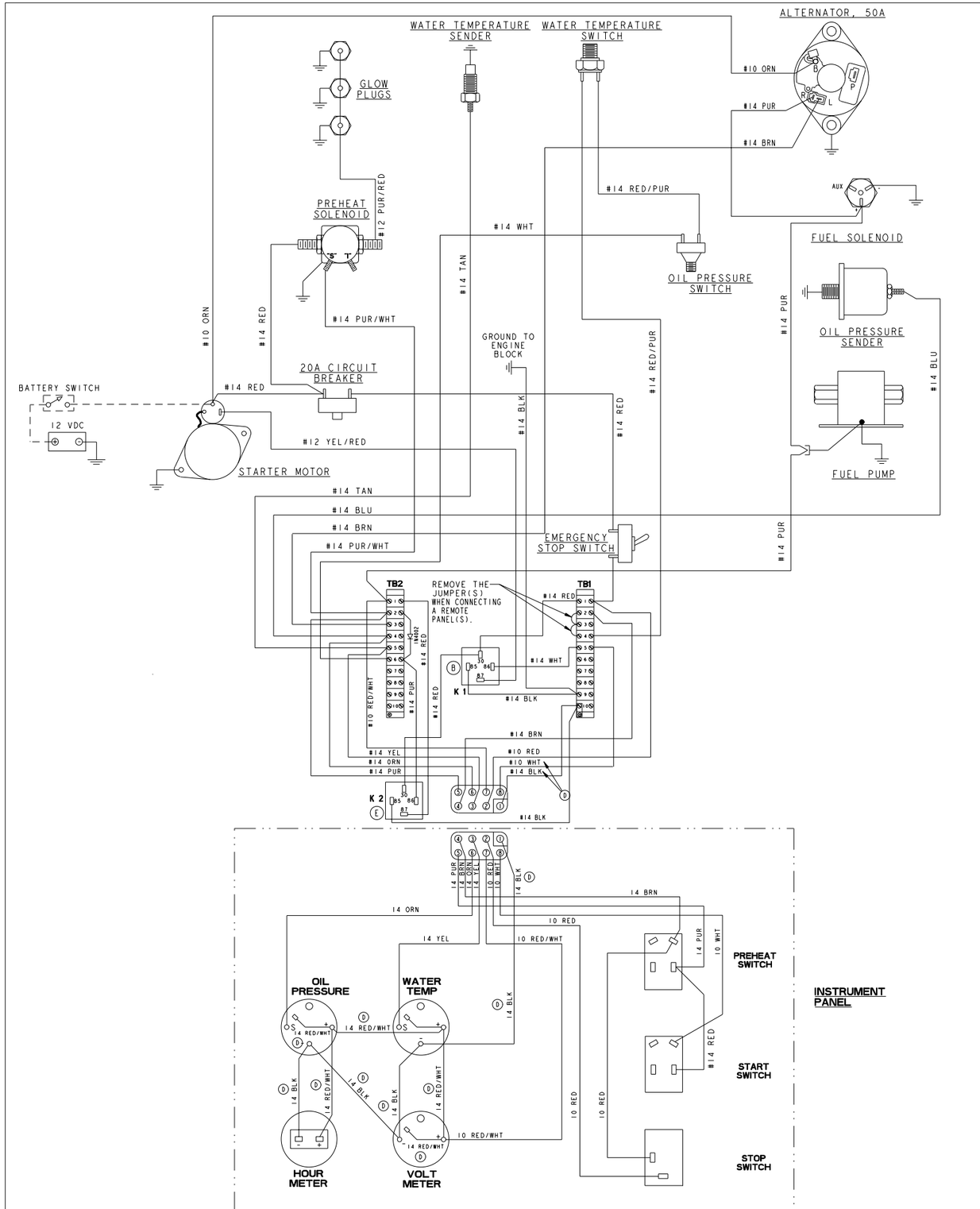

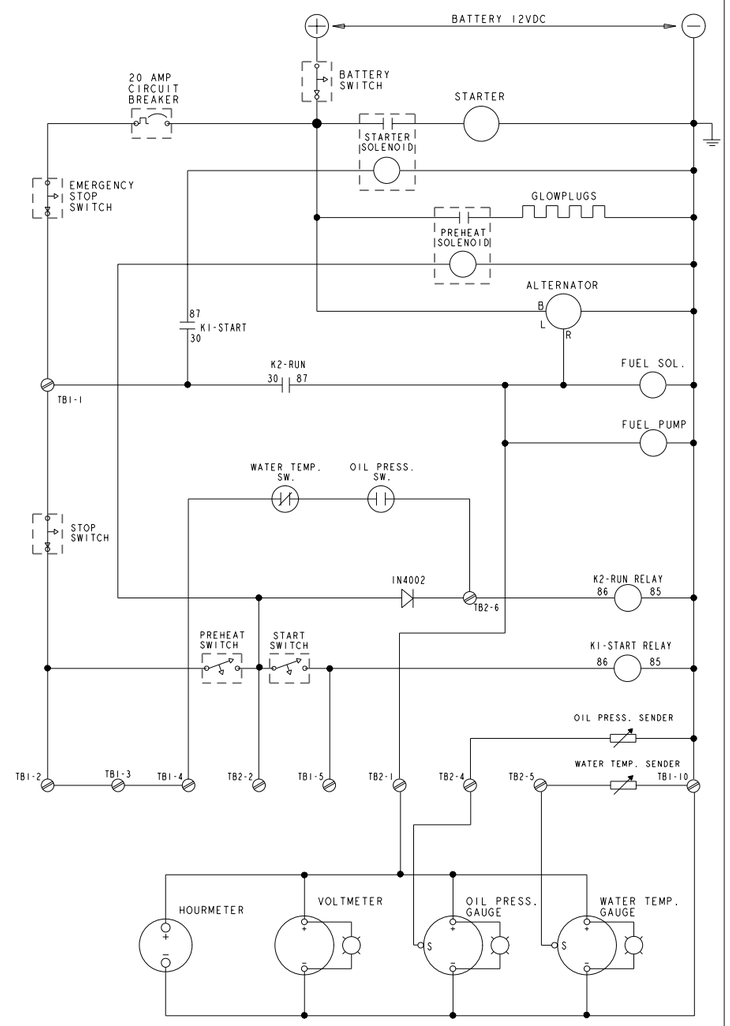

TOLERANCES (UNLESS OTHERWISE NOTED)	WESTERBEKE CORPORATION AVON MA. 02322		
INCHES / MILLIMETERS .XX ±.02 / X ± .XXX ±.005 / .X ± CAST ±.03 / .XX ± ANGLES ±.5° FINISH 63	TITLE WIRING DIAGRAM AND SCHEMATIC 8.0, 10.0, 11.0 BTDR AND 12.5 BTDAR		
	DRAWN BY MRM	DATE 16 MAR 93	MATERIAL -
DIMENSIONS INCHES / MILLIMETERS (WHEN APPLICABLE)	APPROVED BY	DATE	-
	SCALE -	SIZE E	DRAWING NUMBER 39859	REV. E
	SHT. 1 OF 1		