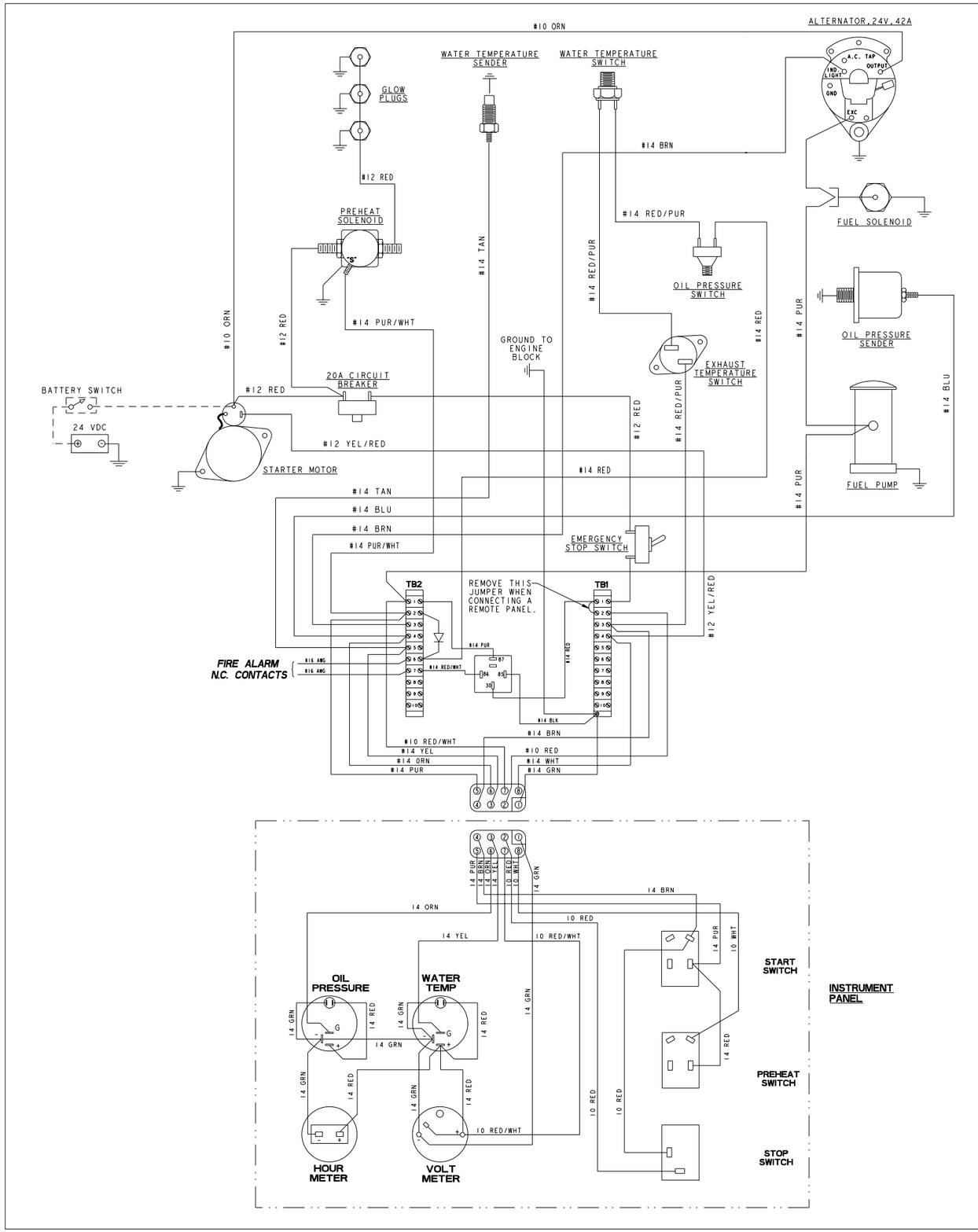

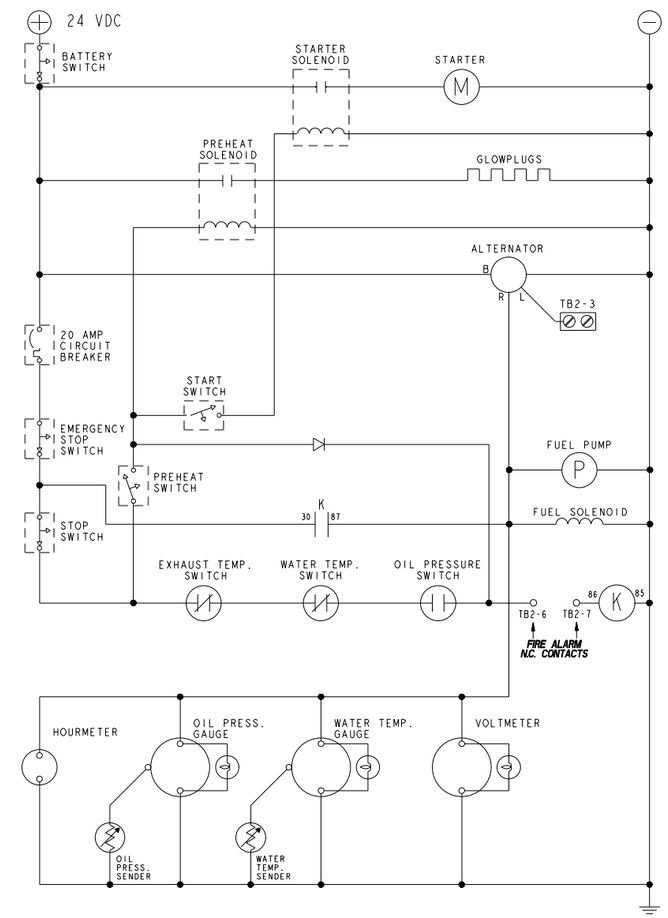

ECO NO.	DATE	REV.	REVISION RECORD	AUTH.	DR.BY

TOLERANCES (UNLESS OTHERWISE NOTED)		WESTERBEKE CORPORATION AVON MA. 02322		
INCHES / MILLIMETERS		TITLE WIRING DIAGRAM, 8.0,10.0,11.0 BTD AND 12.5 BTDA-24V W/FIRE ALARM CONN.		
DIMENSIONS INCHES / MILLIMETERS (WHEN APPLICABLE)	DRAWN BY BRK	DATE 28 NOV 95	MATERIAL -	
	APPROVED BY	DATE -		
	SCALE NONE	SHT. 1 OF 1	SIZE E	DRAWING NUMBER 41479	REV.