ECO NO.	DATE	REV.	REVISION RECORD	AUTH.	DR.BY

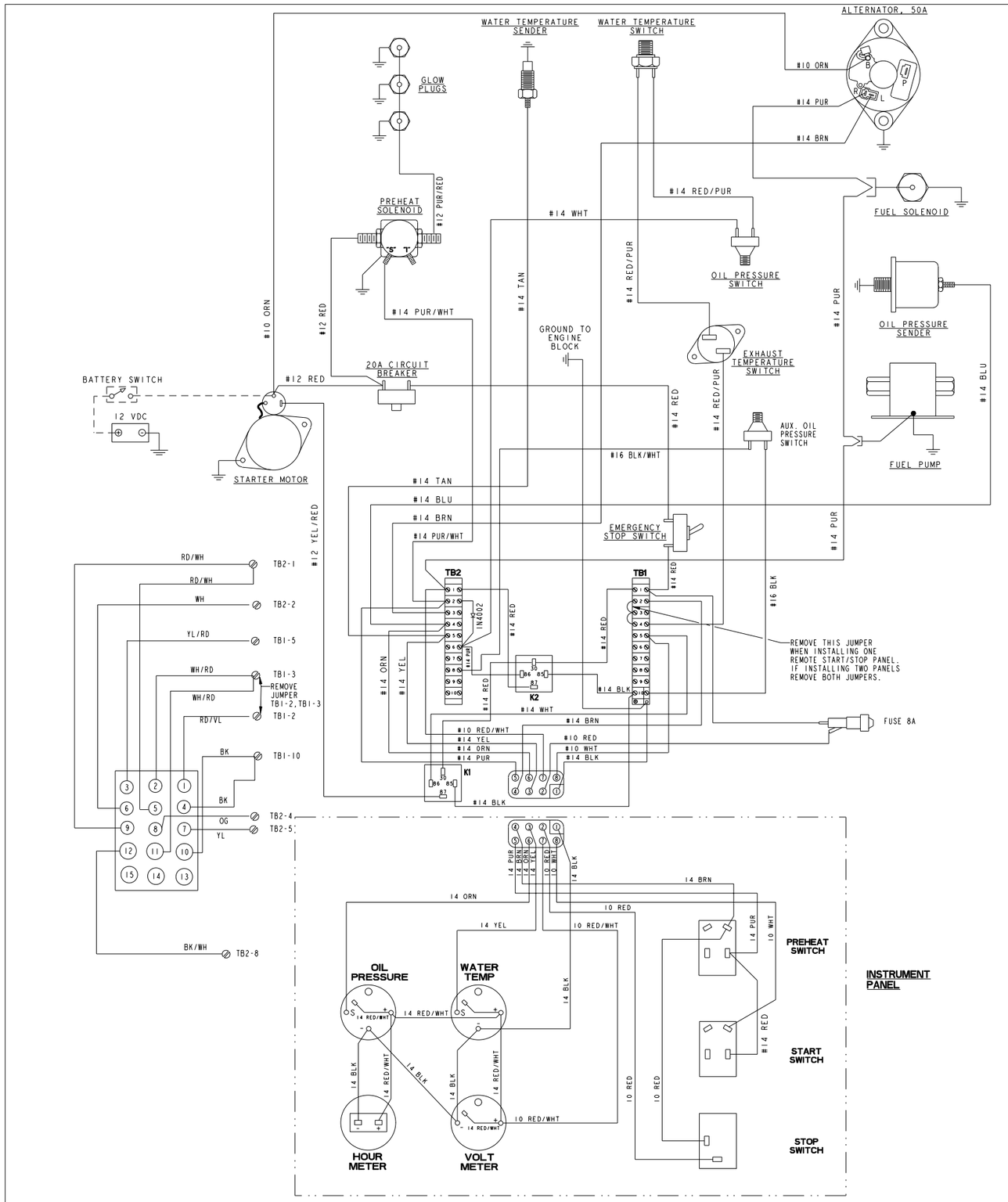

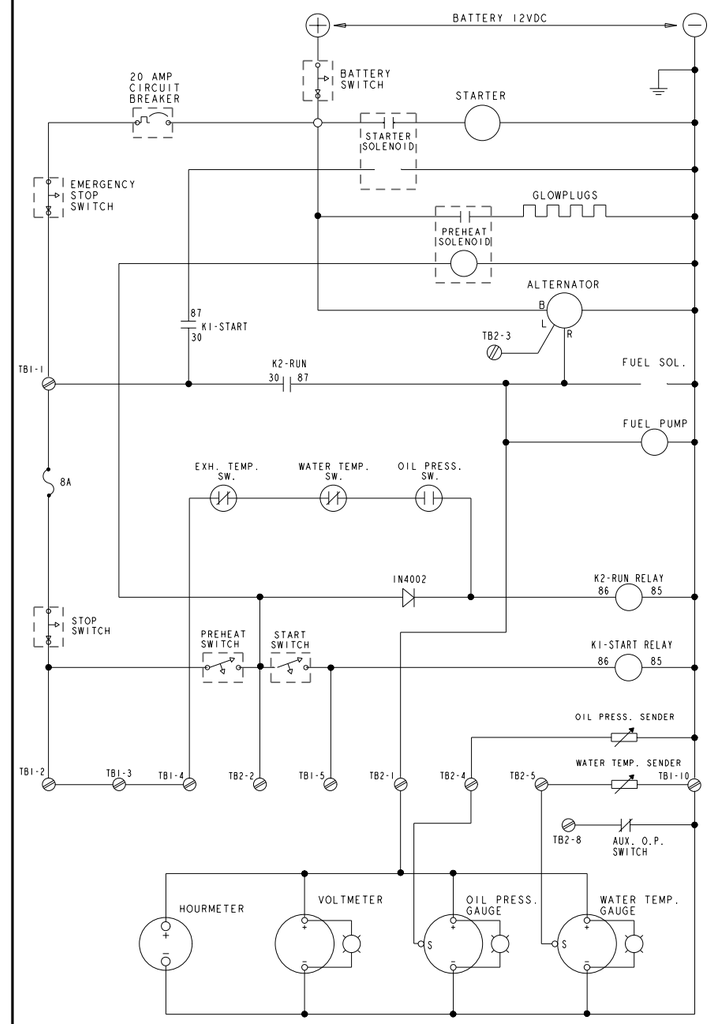

TOLERANCES (UNLESS OTHERWISE NOTED)		WESTERBEKE CORPORATION AVON MA. 02322		
INCHES / MILLIMETERS		TITLE WIRING DIAGRAM AND SCHEMATIC 8.0, 10.0, 11.0 BTD AND 12.5 BTDA SRC		
DIMENSIONS INCHES / MILLIMETERS (WHEN APPLICABLE)	DRAWN BY JCC	DATE 5/4/99	MATERIAL	
	APPROVED BY	DATE		
	SCALE -	SIZE E	DRAWING NUMBER 43944	REV.
	SHT. 1 OF 1			