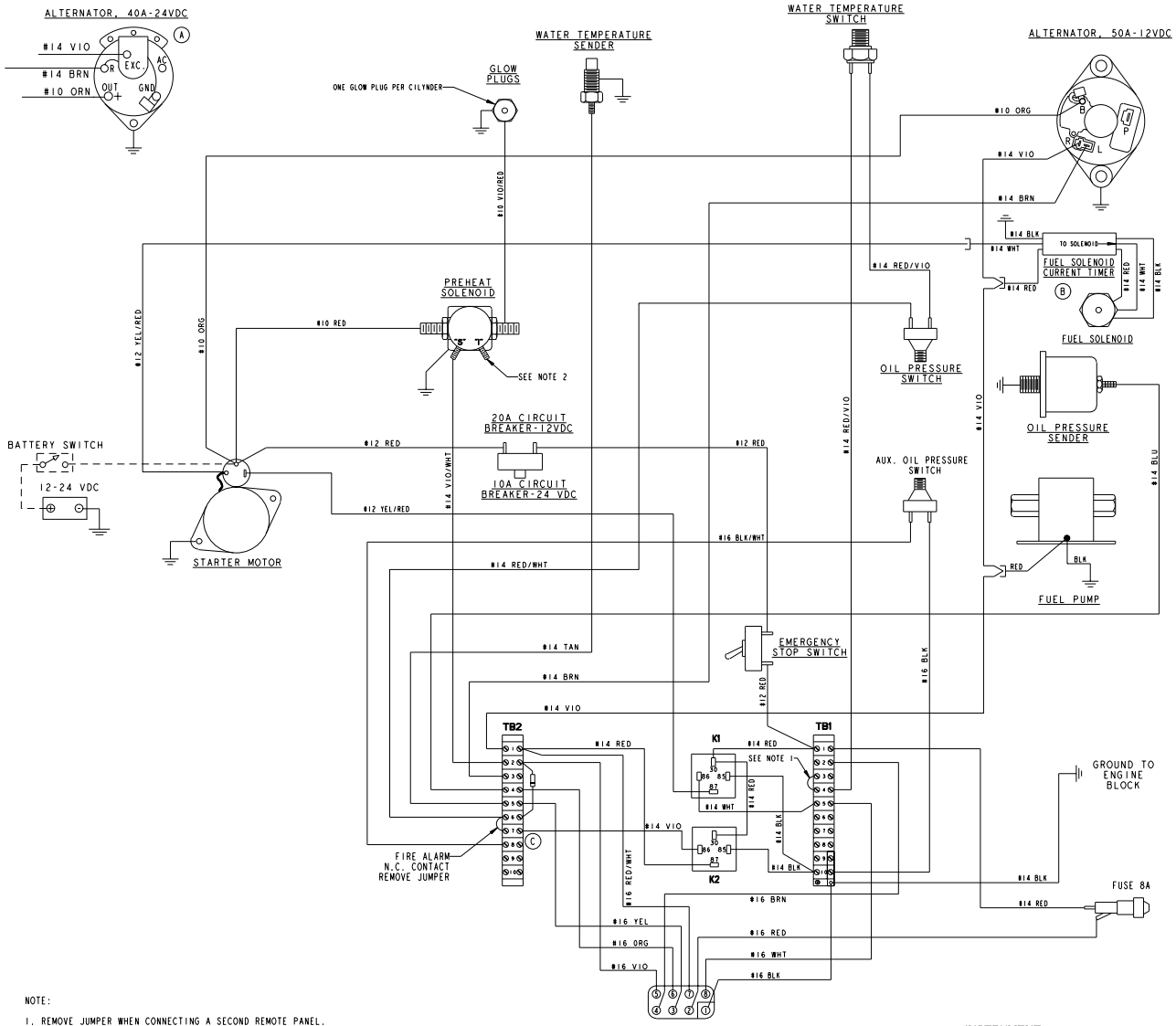

NOTE:

1. REMOVE JUMPER WHEN CONNECTING A SECOND REMOTE PANEL.
2. GROUND "1" TERMINAL OF PREHEAT SOLENOID ON 24V SYSTEM ONLY.

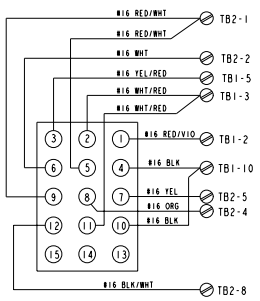

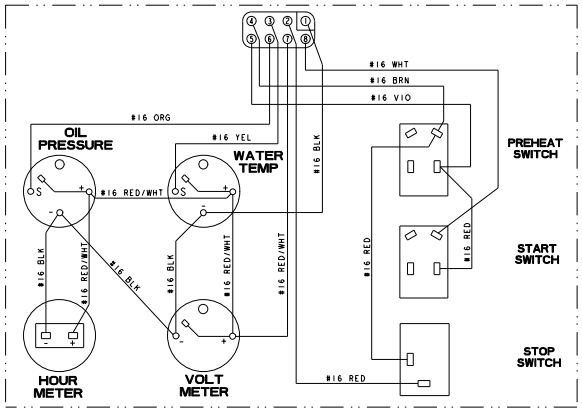

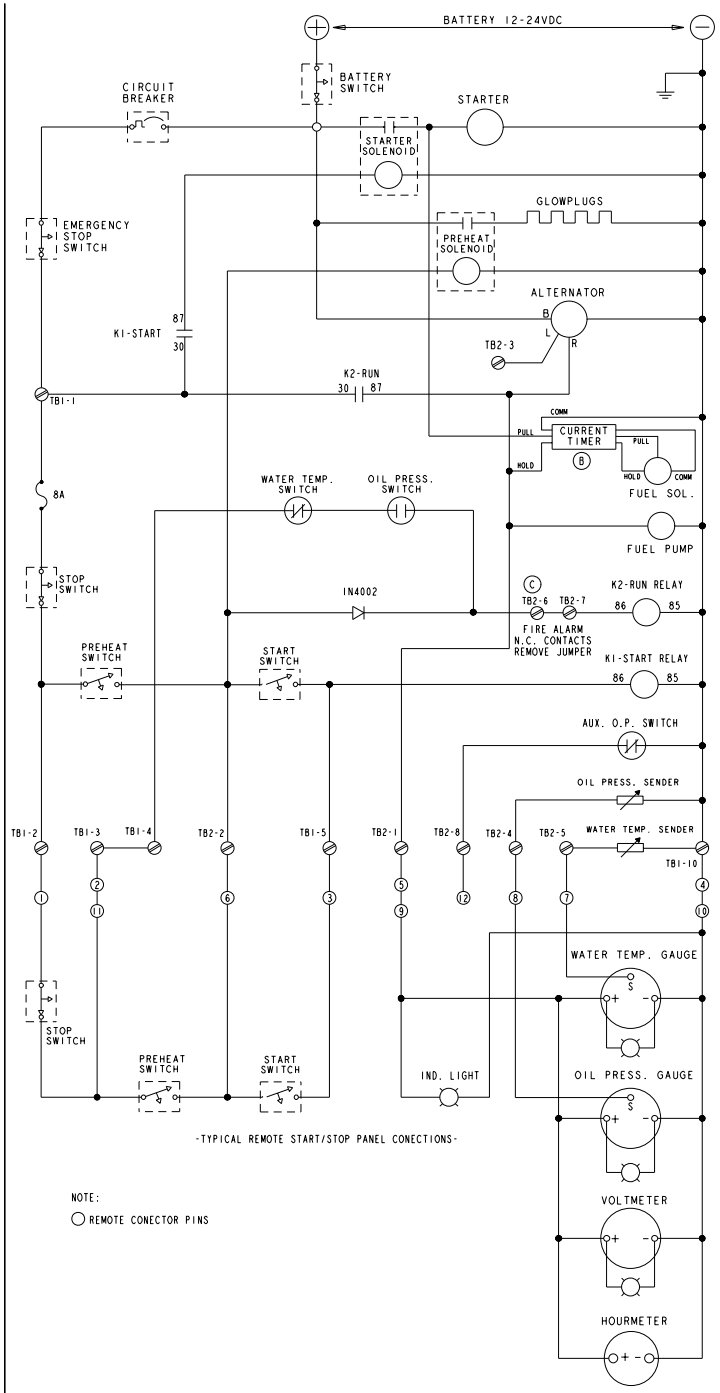

-TYPICAL REMOTE START/STOP PANEL CONECTIONS-

NOTE:

○ REMOTE CONECTOR PINS

ECO NO.	DATE	REV.	REVISION RECORD	AUTH.	DR.BY
5861	11-3-2004	C	ADDED JUMPER BETWEEN TB2-6&7. K2-86 WAS CONNECTED TO TB2-6.		GA
5082	10/24-31/94	B	ADDED CURRENT TIMER		TSM
4632	7/24-31/92	A	UPDATED ALTERNATOR WIRING SCHEMATIC		TSM

TOLERANCES (UNLESS OTHERWISE NOTED)
INCHES / MILLIMETERS
.XX ±.02 / X. ±.
.XXX ±.005 / X.X ±.
CASTS ±.03 / XX. ±.
ANGLES ±1/2°
DIMENSIONS ← INCHES / MILLIMETERS → (CHECK APPLICABLE)

WESTERBEKE CORPORATION
AVON MA. 02322

TITLE: WIRING DIAGRAM/SCHEMATIC, 8.0 BTDAR, 10.0 BTDAR, 12.5 BTDBR, 15.0 BTDCR - SRC

DRAWN BY: MPG | DATE: 16/May/00 | MATERIAL:
APPROVED BY: | DATE:
SCALE: NONE | SIZE: E | DRAWING NUMBER: 44744 | REV. C
SHT. 1 OF 1