ECO NO.	DATE	REV.	REVISION RECORD	AUTH.	DR.BY

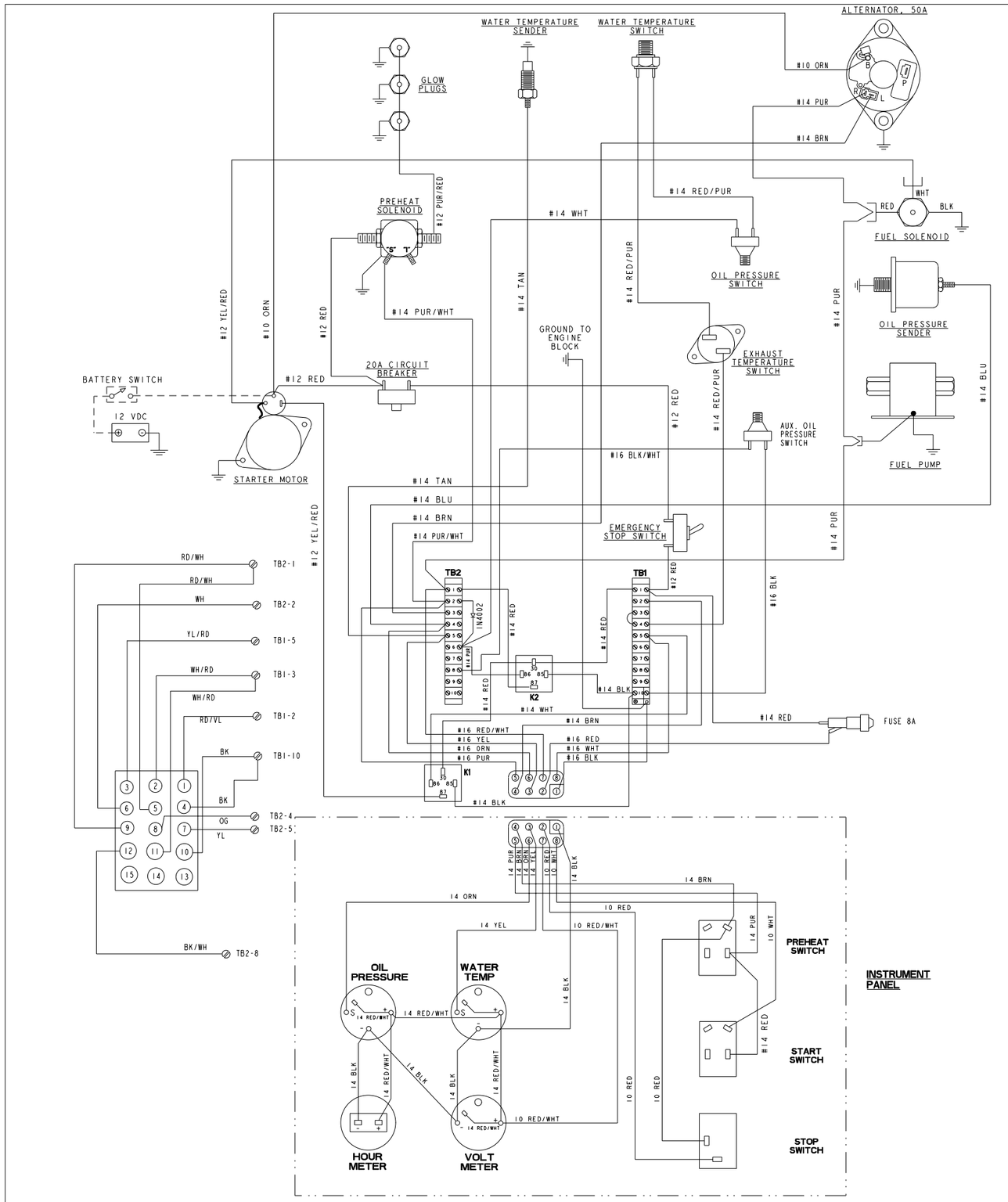

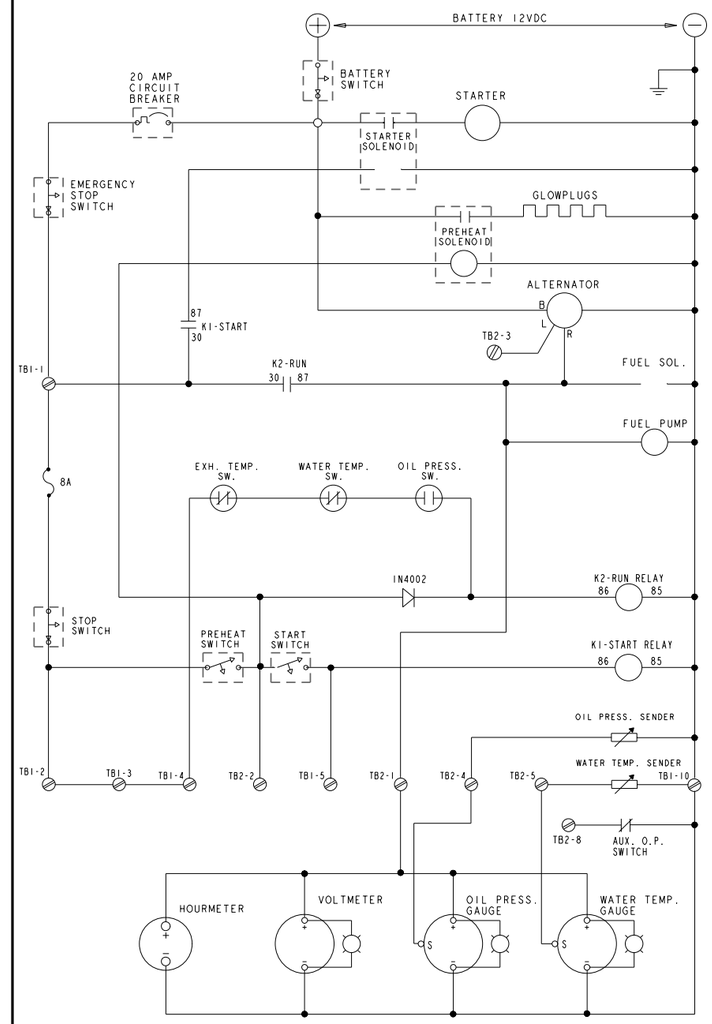

TOLERANCES (UNLESS OTHERWISE NOTED)	WESTERBEKE CORPORATION AVON MA. 02322			
INCHES / MILLIMETERS: .XX ±.02 / X. ±; .XXX ±.005 / .X ±; CAST ±.03 / .XX ±; ANGLES ±.5°; FINISH 63	TITLE: WIRING DIAGRAM AND SCHEMATIC 8.0, 10.0, 12.5, AND 15 BTDC SRC			
DIMENSIONS: INCHES / MILLIMETERS (WHEN APPLICABLE)	DRAWN BY: JRS	DATE: 10/26/99	MATERIAL:	
	APPROVED BY:	DATE:		
	SCALE: –	SIZE: E	DRAWING NUMBER: 43647	REV.
	SHT. 1 OF 1			