ECO NO.	DATE	REV.	REVISION RECORD	ANTH.	DR.BY
4631	7/7 00	A	REDESINGED WIRING DIAGRAM FOR 7A-1 USING ALTERNATOR.		TSM
4694	8/22 00	B	REMOVED WIRE #6 AND CHANGED WIRE GAUGE TO CONFORM WITH HARNESS.		TSM

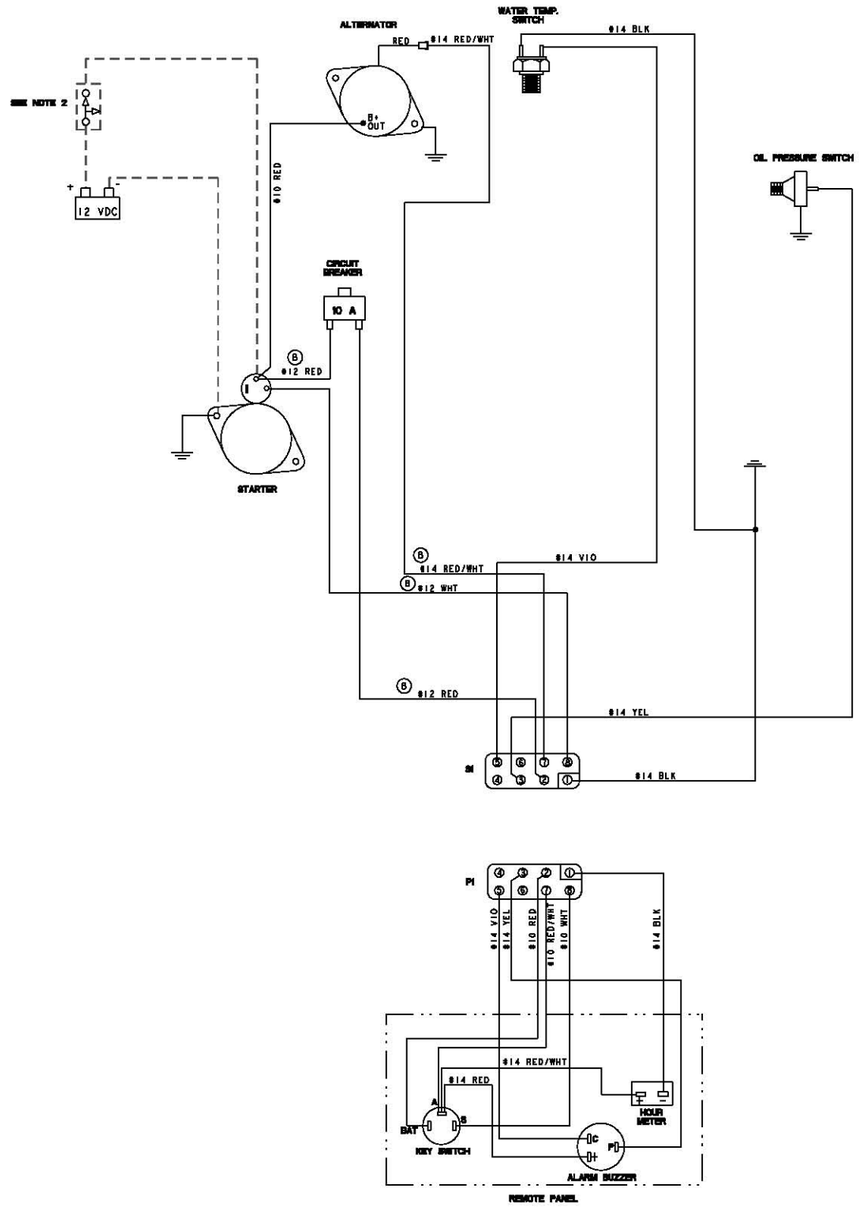

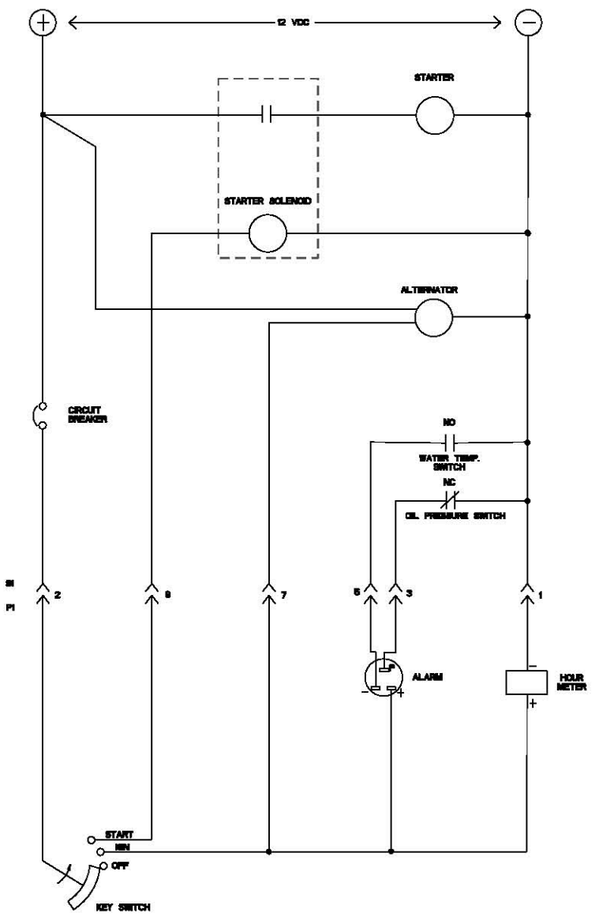

NOTES:
1. THIS PRODUCT IS PROTECTED BY A MANUAL RESET CIRCUIT BREAKER LOCATED NEAR THE STARTER. EXCESSIVE CURRENT WILL CAUSE THE BREAKER TO TRIP AND THE ENGINE WILL SHUT DOWN. THE BUILDER/OWNER MUST BE SURE THAT THE INSTRUMENT PANEL, WIRING, AND ENGINE ARE INSTALLED TO PREVENT CONTACT BETWEEN ELECTRICAL DEVICES AND SEAWATER.

2. AN ON-OFF SWITCH SHOULD BE INSTALLED BETWEEN THE BATTERY AND STARTER TO DISCONNECT THE BATTERY IN AN EMERGENCY AND WHEN LEAVING THE BOAT. A SWITCH WITH A CONTINUOUS RATING OF 175 AMPS. AT 12 VDC WILL SERVE THIS FUNCTION. THIS SWITCH SHOULD NOT BE USED TO MAKE OR BREAK THE CIRCUIT.

TOLERANCES (UNLESS OTHERWISE NOTED)	WESTERBEKE CORPORATION AVON MA. 02322
INCHES .XX ±.02 .XXX ±.005 .XXX ±.03 ANGLES ±.5° FINISH ⊕	TITLE WIRING DIAGRAM/SCHEMATIC 7A-1 PROPULSION ENGINE
DIMENSIONS INCHES (MILLIMETERS) (THICK APPLICABLE)	DRAWN BY CEU · DATE 13/Dec/99 · MATERIAL:
	APPROVED BY · DATE
	SCALE NONE · SIZE E · DRAWING NUMBER 44542 · REV. A
	SHT. 1 OF 1