ECO NO.	DATE	REV.	REVISION RECORD	AUTH.	DR.BY
3285	2/5 90	A	ADDED RELAY. REDREW SCHEMATIC TO CLARIFY CONNECTIONS		BRN
4664	5/1 92	B	ADDED TRANSIENT VOLTAGE SUPPRESSOR TO CIRCUIT		TSM

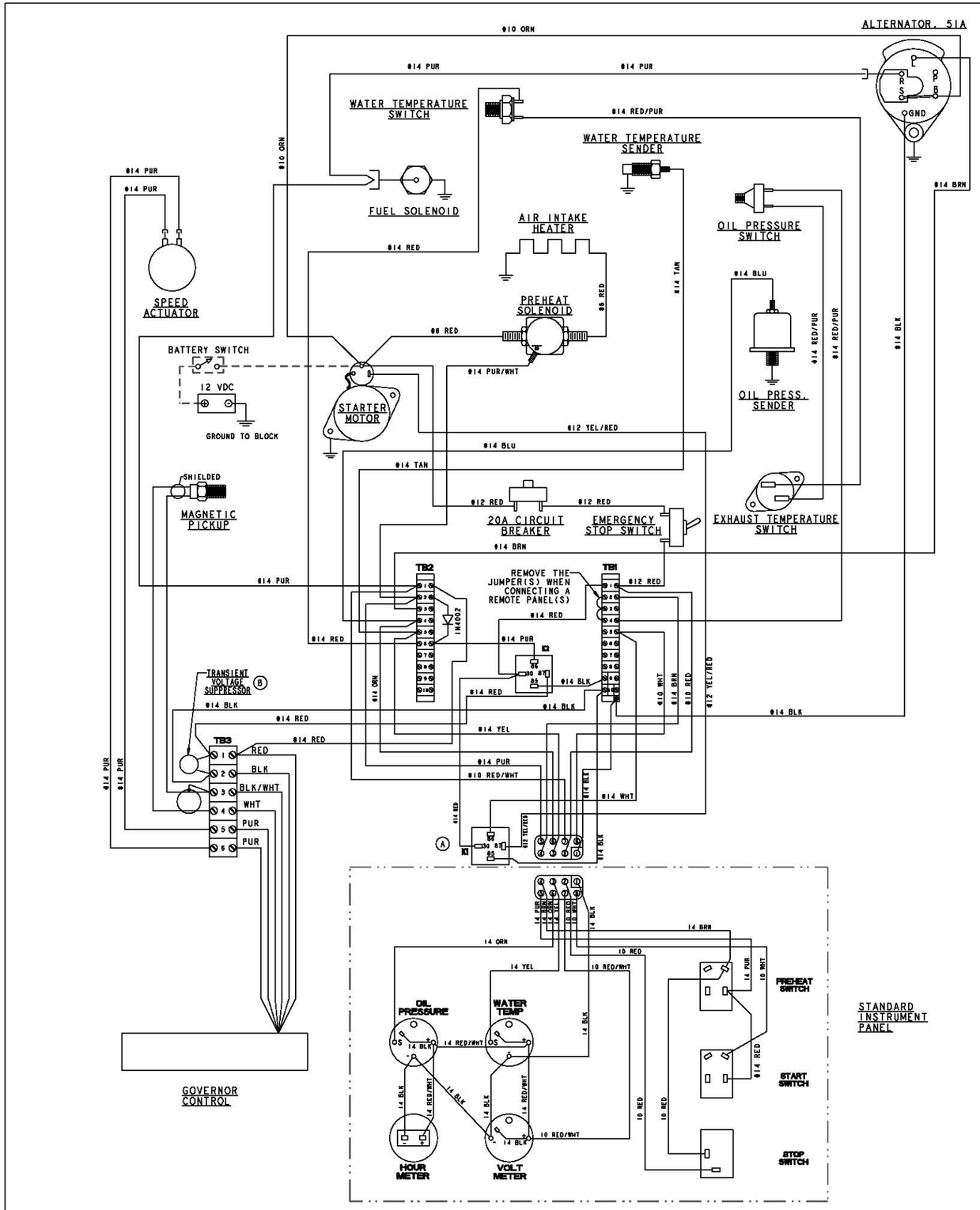

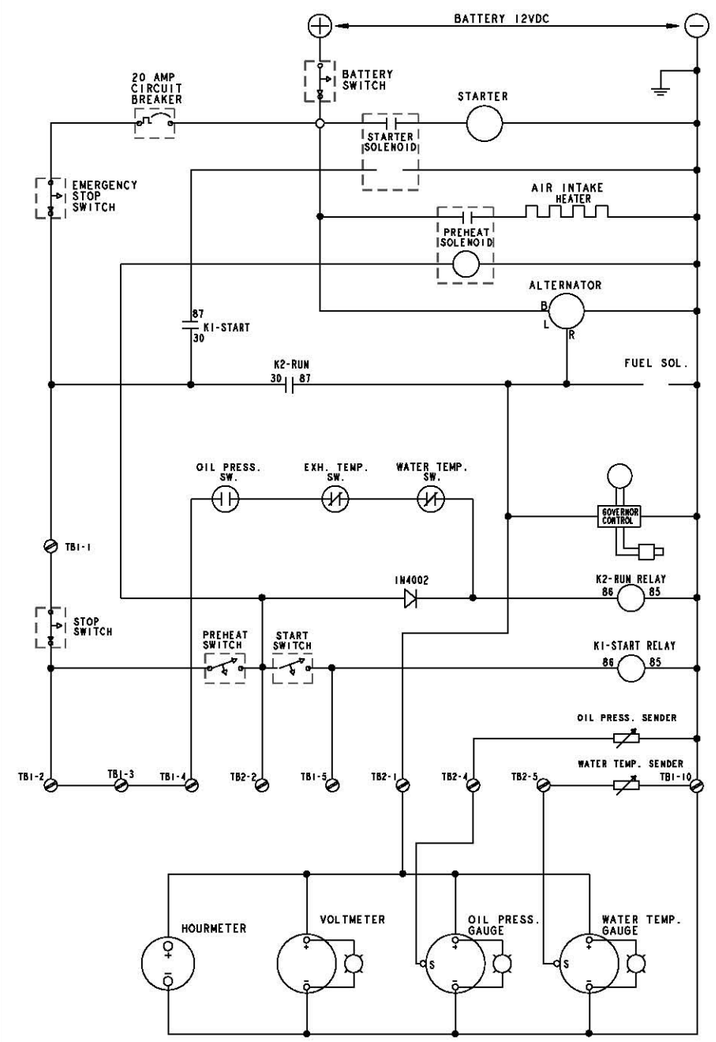

TOLERANCES	WESTERBEKE CORPORATION AVON MA. 02322
INCHES .XX ±.02 .XXX ±.005 FRACTIONS ±1/32 ANGLES ±1°	MILLIMETERS X.X ±.5 X.XX ±.25
TITLE WIRING DIAGRAM, 32.0 KW BEDA WITH ELECTRONIC GOVERNING	
DRAWN BY BRN	DATE 18/Mar/94
DIMENSIONS INCHES	APPROVED BY
SCALE N/A	SHT. 1 OF 1
SIZE E	DRAWING NUMBER 404-25
REV. B	