ECO NO.	DATE	REV.	REVISION RECORD	AUTH.	DR.BY
5178	1/17/87	A	ADDED POLARITY SYMBOLS TO SCHEMATIC		TSM
5291	8/17/87	B	WIRE #12 BLU WAS #12 GREEN		TSM
5386	10/24/02	C	CONTROLLER VIO/WHT(+) was VIO(+)		HJN
5606	9-12-03	D	REMOVED BATTERY CHARGER FROM 20A BREAKER; ADDED LINE FROM BATTERY CHARGER TO STARTER B+; ADDED 30A FUSE TO BATTERY CHARGER.		WRM

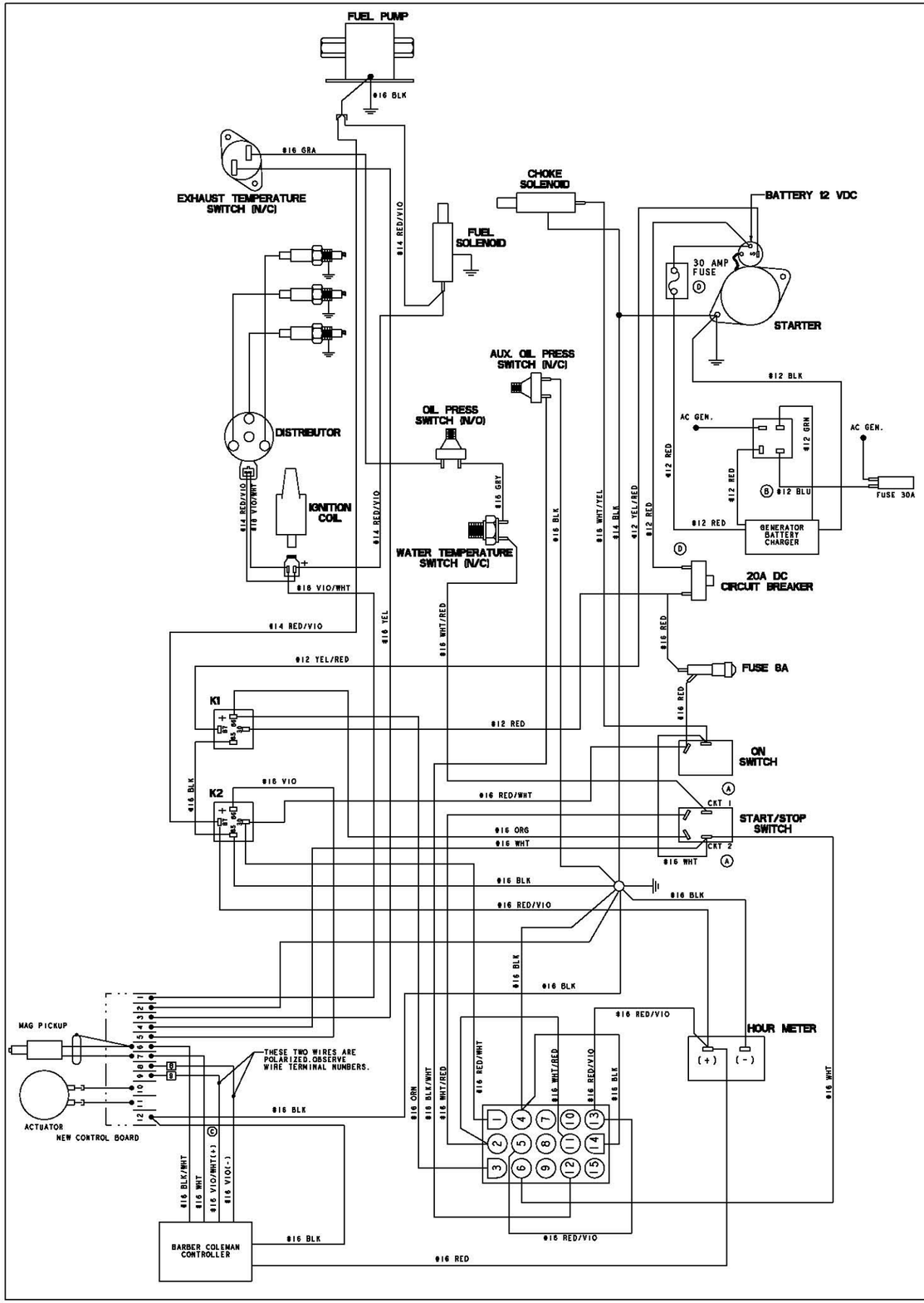

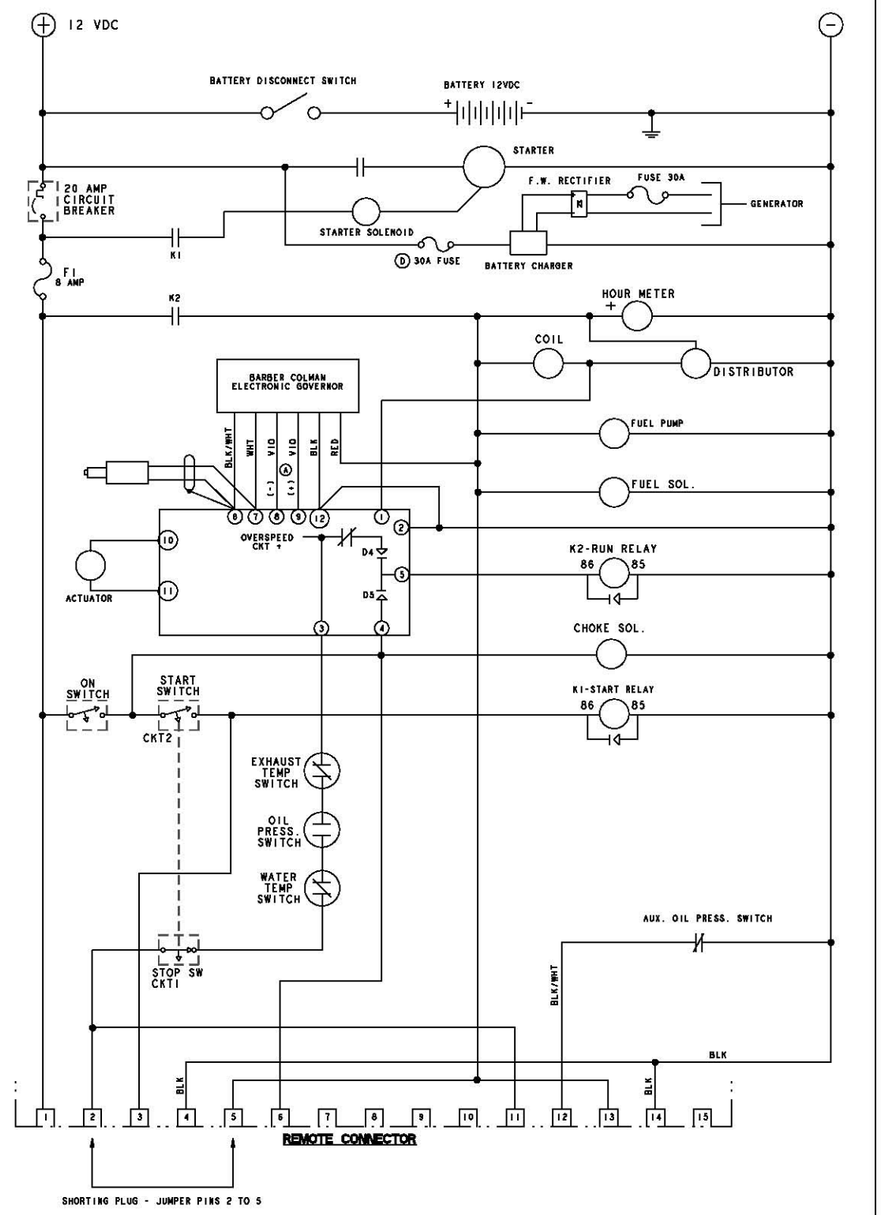

NOTES:
1. ALL WIRE #16AWG(105DEG C 600V-ALPHA# 1858/19-MIL-W-16878D TYPE B) UNLESS SPECIFIED OTHERWISE.
2. WARNING - RELAYS K1, K2 HAVE INTERNAL DIODES ACROSS THEIR COILS, POLARITY AS INDICATED MUST BE MAINTAINED TO AVOID DAMAGE TO THE RELAYS.

TOLERANCES (UNLESS OTHERWISE NOTED)	WESTERBEKE CORPORATION TAUNTON MA, 02780		
INCHES .XX ±.02 .XXX ±.005 .XXX ±.03 ANGLES ±2° FINISH	TITLE WIRING DIAGRAM 5.0 - 7.0 BCG		
DIMENSIONS INCHES	DRAWN BY JRS	DATE 18/Nov/91	MATERIAL
	APPROVED BY	DATE	
	SCALE NONE	SIZE E	DRAWING NUMBER 46876
	SHT. 1 OF 1		REV. D