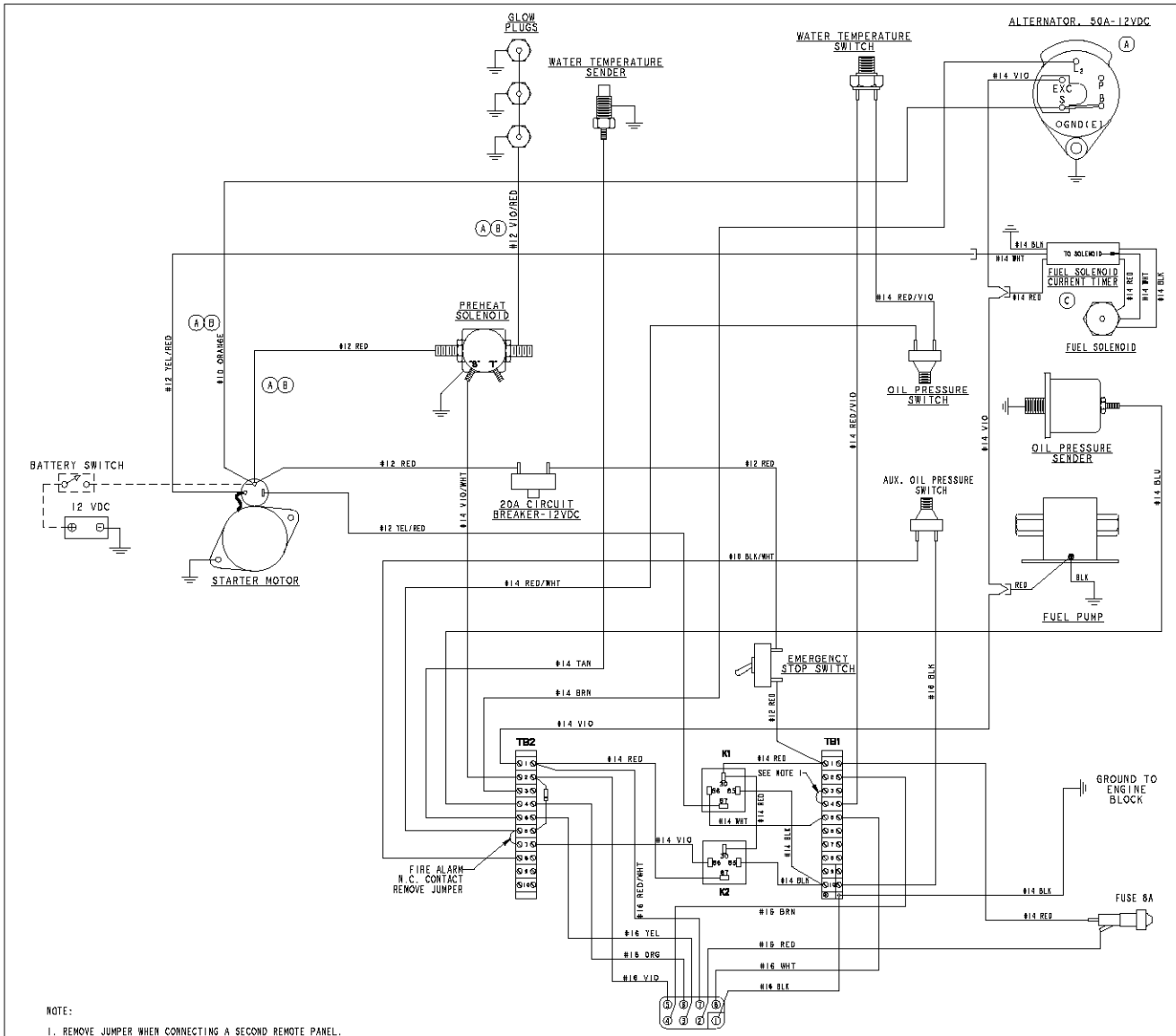

NOTE:

1. REMOVE JUMPER WHEN CONNECTING A SECOND REMOTE PANEL.

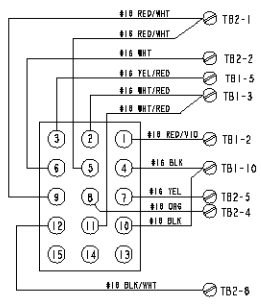

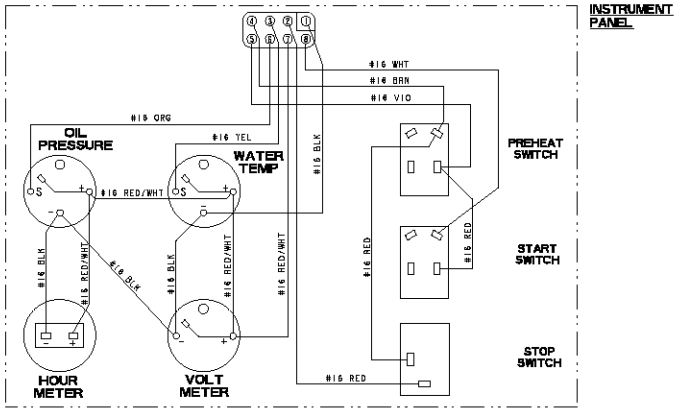

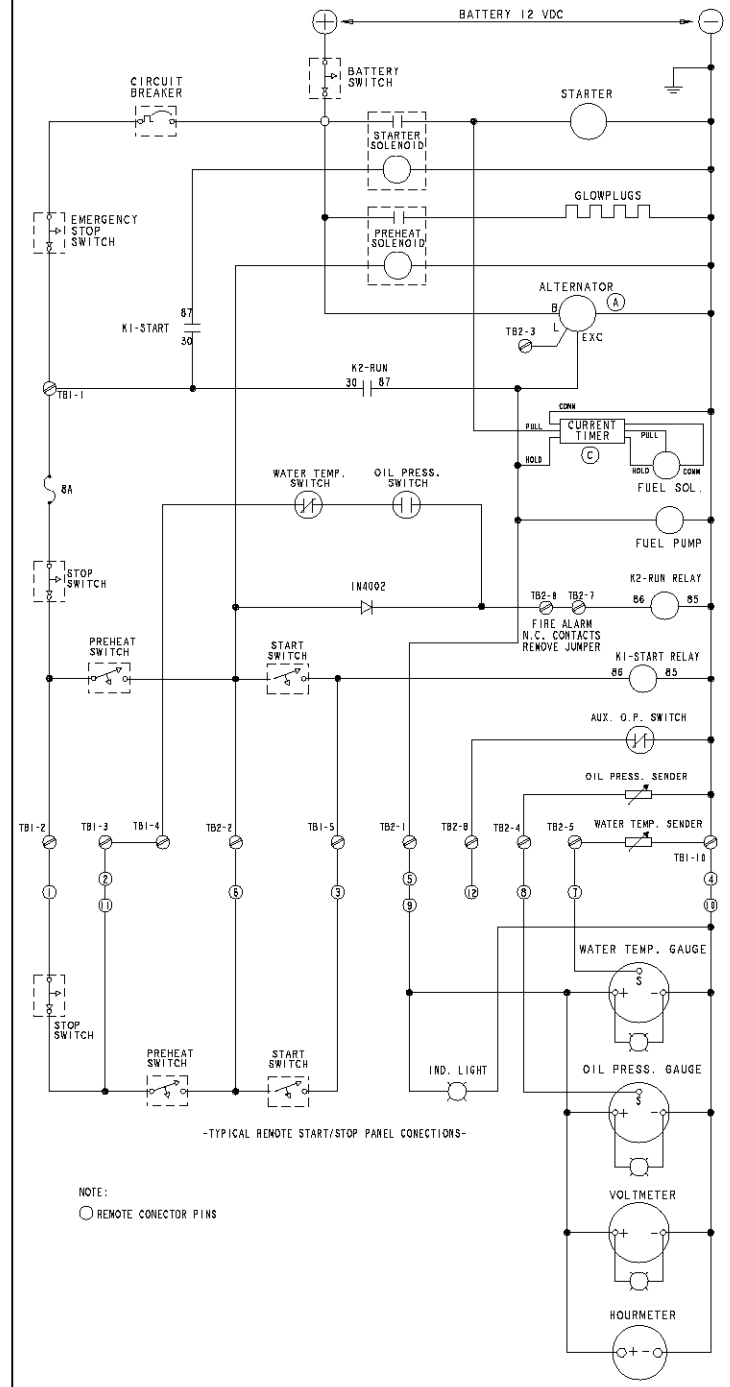

-TYPICAL REMOTE START/STOP PANEL CONECTIONS-

NOTE:

○ REMOTE CONECTOR PINS

ECO NO.	DATE	REV.	REVISION RECORD	AUTH.	DR.BY
5861	11/2 04	D	ADDED JUMPER BETWEEN TB2-6&7; K2-86 WAS CONNECTED TO TB2-8.		GA
5062	10/24 97	C	ADDED CURRENT TIMER		TSN
4737	1/8 00	B	#10 ORANGE WAS #10 RED, #12 VIO/RED WAS #12 VIO REROUTED WIRE FROM PREHEAT SOLENOID TO STARTER		JRS
4632	7/12 00	A	UPDATED ALTERNATOR WIRING SCHEMATIC WIRE #10 RED WAS #18 ORA. WIRE #12 VIO WAS #12 VIO/RED. WIRE #12 RED REROUTED FROM STARTER TO 20 AMP CIRCUIT BREAKER.		TSN

TOLERANCES (UNLESS OTHERWISE NOTED)
INCHES: .XX ±.03, .XXX ±.010, ANGLES ±1°
MILLIMETERS: .X ±.1, .XX ±.25, .XXX ±.10

DIMENSIONS: INCHES / MILLIMETERS (TRACE APPLICABILITY)

WESTERBEKE CORPORATION
AVON MA. 02322

TITLE: WIRING DIAGRAM/SCHEMATIC, 7.0 BTDR - SRC

DRAWN BY: MPG | DATE: 16/Mar/00 | MATERIAL: -
APPROVED BY | DATE | -
SCALE: NONE | SIZE: E | DRAWING NUMBER: 44743 | REV: D
SHT. 1 of 1