ECO NO.	DATE	REV.	REVISION RECORD	AUTH.	DR.BY
3647	3/2 98	A	ADDED (2) RELAYS TO ENERGIZE STARTER SOLENOID ADDED DIODE, REMOVED 10 AMP C.B.REDRAW SCHEMATIC.		BRN
3652	3/28 98	B	ADDED OPTIONAL REMOTE INSTRUMENT PANEL, MODIFIED WIRES TO CURRENT STANDARDS.		BRN
4206	9/9 98	C	#14 WHT WAS #14 RED/VIO, #14 PUR WAS RED/VIO ADDED WIRE (#14 BRN, TB2-3 TO ALT.)		CEU

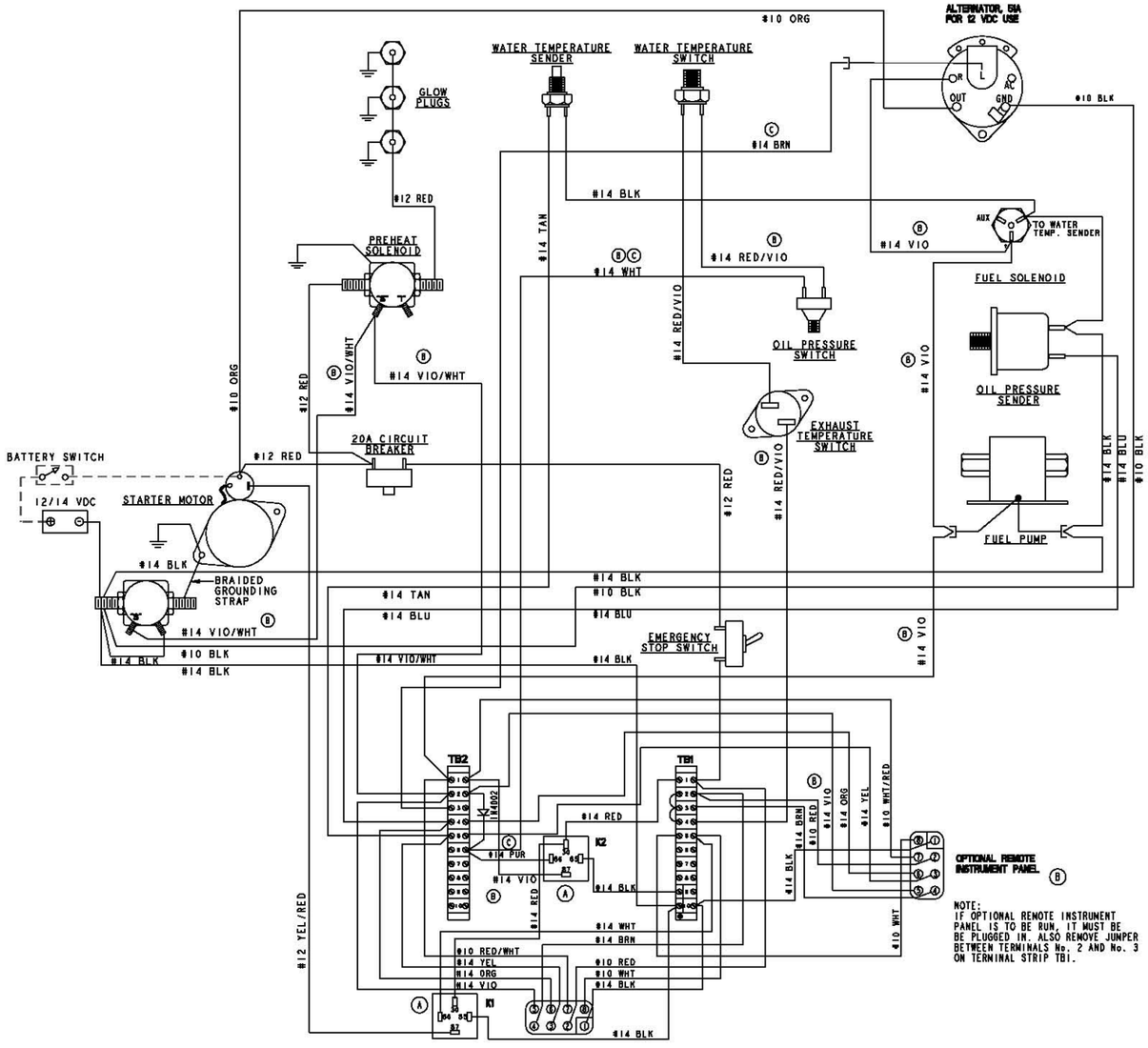

NOTE:
IF OPTIONAL REMOTE INSTRUMENT PANEL IS TO BE RUN, IT MUST BE BE PLUGGED IN. ALSO REMOVE JUMPER BETWEEN TERMINALS No. 2 AND No. 3 ON TERMINAL STRIP TB1.

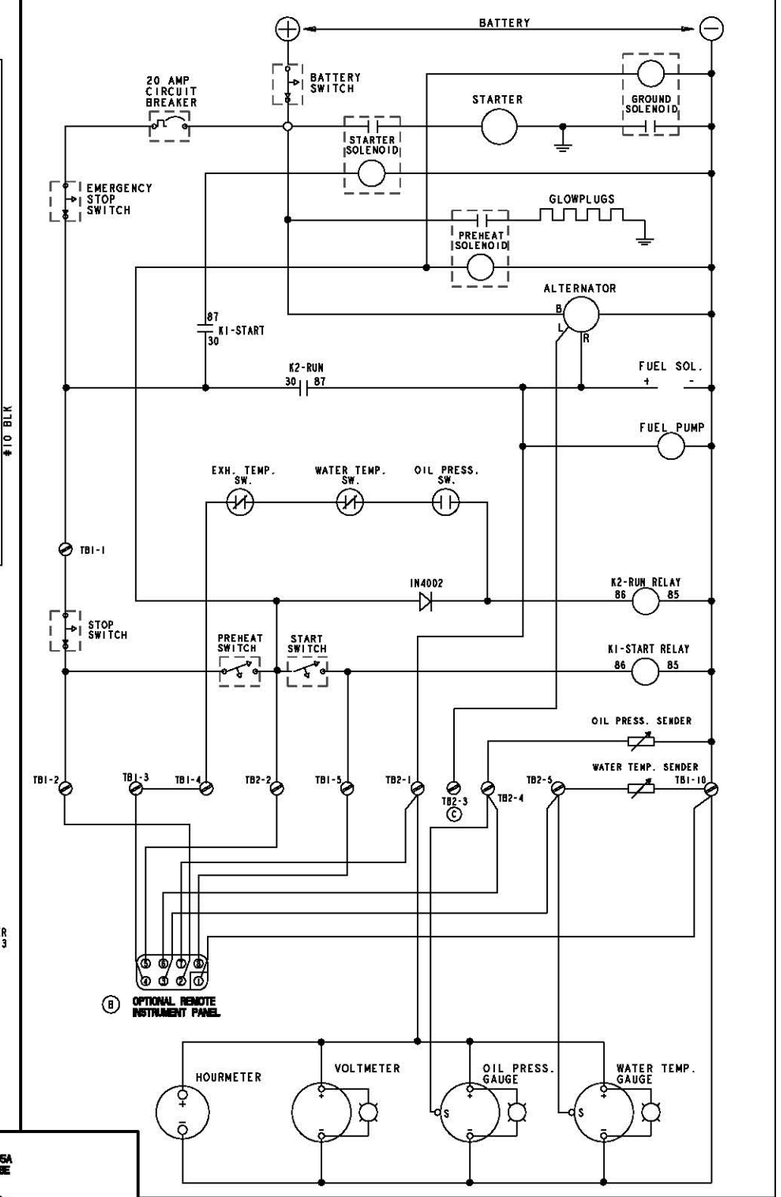

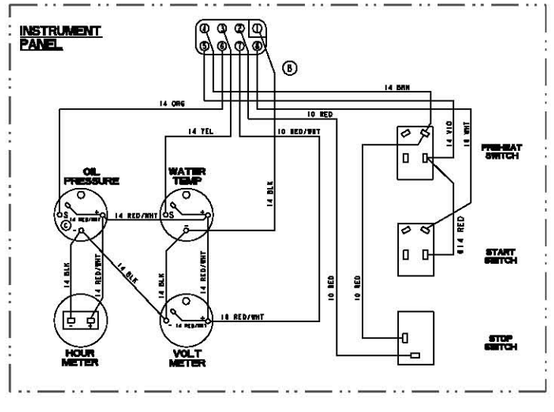

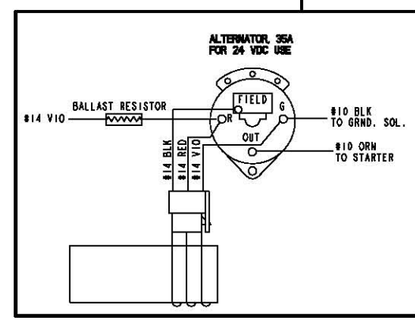

NOTES:
1. THIS DIAGRAM CAN BE USED FOR 12 OR 24 VDC SYSTEM.

TOLERANCES	WESTERBEKE CORPORATION AVON MA. 02322
INCHES / MILLIMETERS	TITLE: WIRING DIAGRAM/SCHEMATIC 12/24 VDC UNGND 8, 10, 11 BTD AND 12.5 BTDA
DIMENSIONS	SCALE: - / SHT. 1 of 1 / DATE: 9/3/97 / SIZE: E / DRAWING NUMBER: 42645 / REV. C