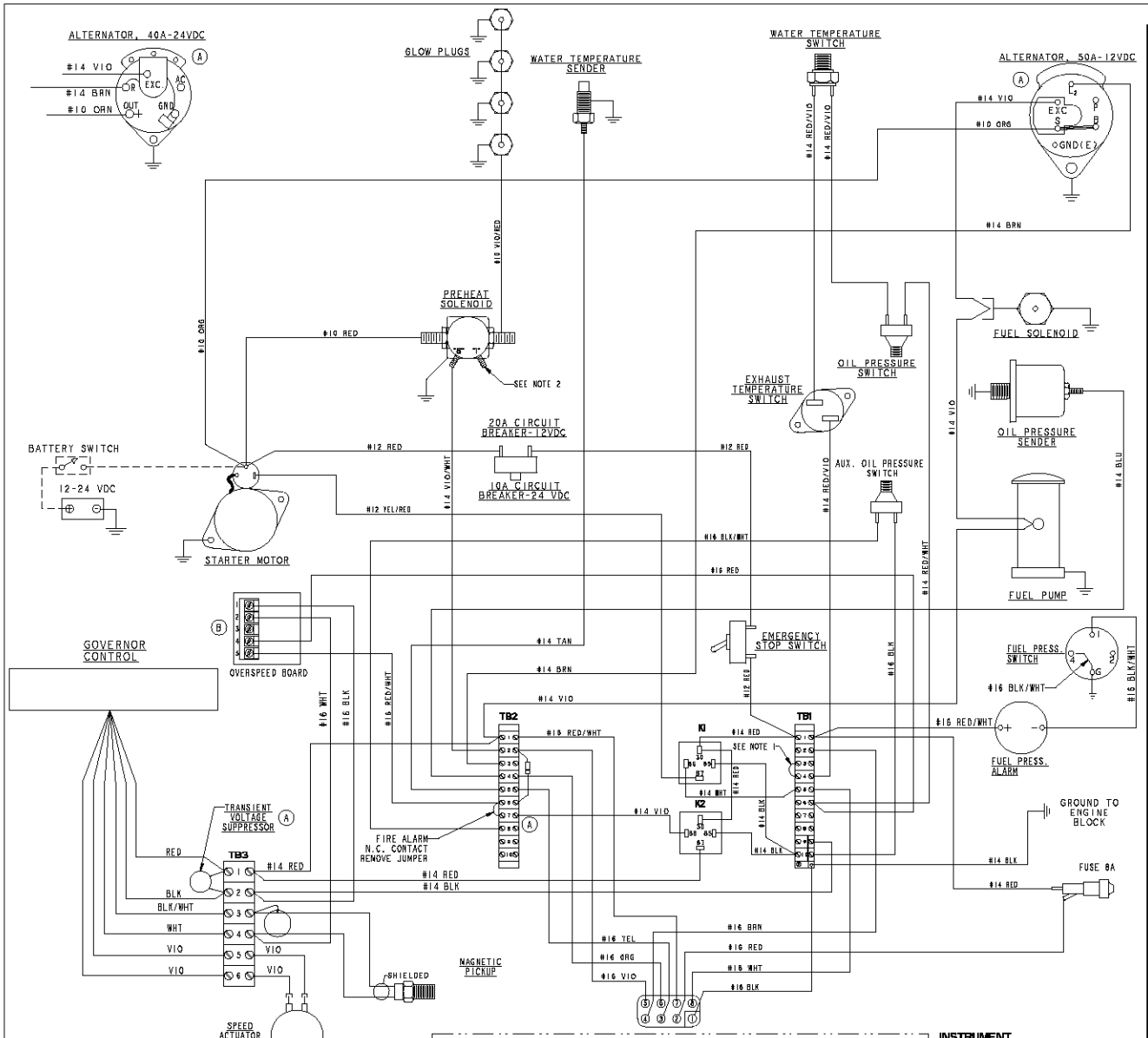

NOTE:

1. REMOVE JUMPER WHEN CONNECTING A SECOND REMOTE PANEL.
2. GROUND "I" TERMINAL OF PREHEAT SOLENOID ON 24V SYSTEM ONLY.

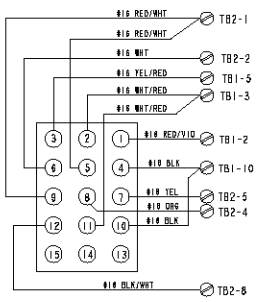

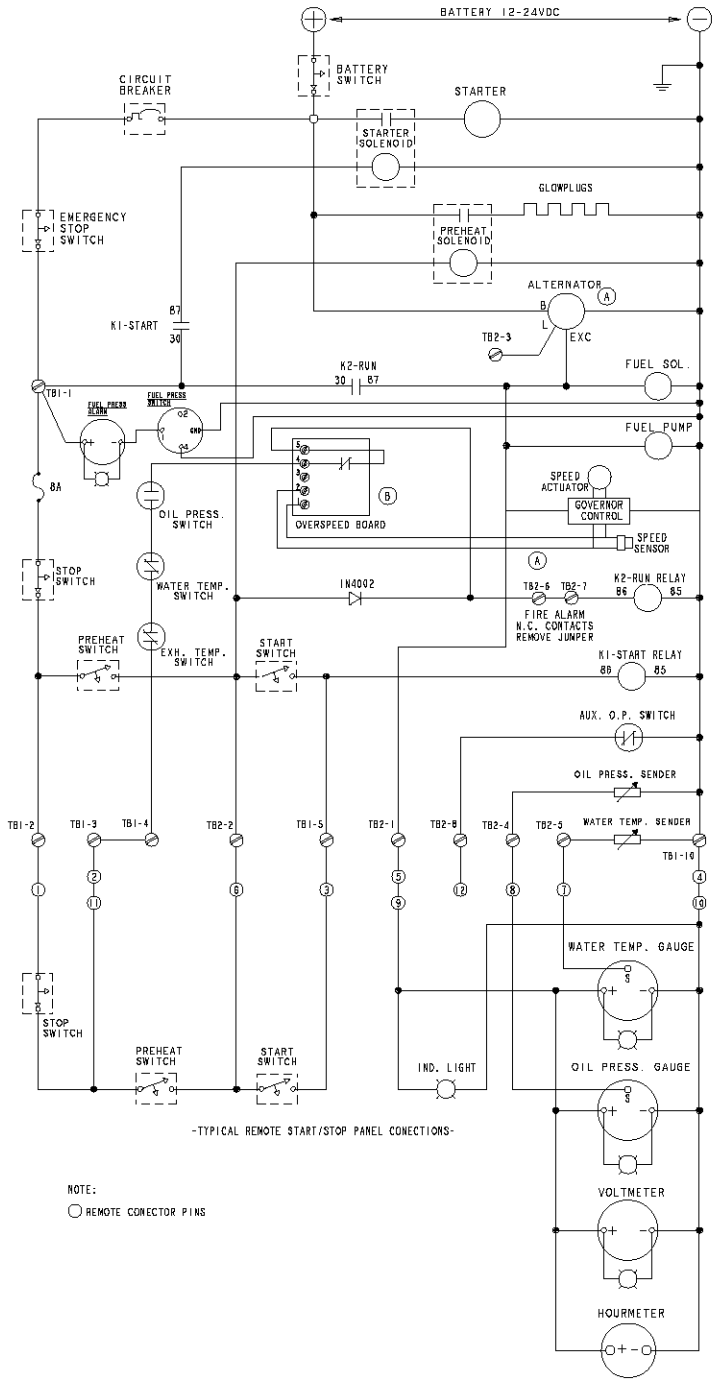

-TYPICAL REMOTE START/STOP PANEL CONECTIONS-

NOTE:

REMOTE CONECTOR PINS

ECO NO.	DATE	REV.	REVISION RECORD	AUTH.	DR.BY
5861	11-2-2004	A	ADD JUMPER BETWEEN TB2-8&7; K2-86 WAS CONNECTED TO TB2-6.		GA

TOLERANCES (UNLESS OTHERWISE NOTED): INCHES .XX ±.03, .XXX ±.010, .XXXX ±.005, ANGLES ±1°, FINISH ±3 — MILLIMETERS .X ±.1, .XX ±.25, .XXX ±.13, ANGLES ±1°, FINISH ±3

DIMENSIONS: INCHES / MILLIMETERS — CHECK APPLICABILITY

WESTERBEKE CORPORATION
TAUNTON MA. 02780

TITLE: WIRING DIAGRAM 20.0 BEDA, 25.0 BED DOUBLE WALL FUEL LINE

DRAWN BY: GA — DATE: 8/Mar/04 — DATE(LEVEL): -
APPROVED BY: — DATE: -

SCALE: NONE — SIZE: E — DRAWING NUMBER: 48781 — REV: A

SHT. 1 of 1